TEST REPORT

F1487 – 21

Standard Consumer Safety Performance Specification for Playground Equipment for Public Use

Report Reference No. .....:	08.05.23.0223.01
Compiled by (+ signature).....:	David Xu
Approved by (+ signature).....:	Frant Chiu
Date of issue .....:	2023-09-19
Testing Laboratory .....:	Anxin Product Test Service Co., Ltd
Address .....:	Floor 2, Yuanjing Building, No.899, Sanyuanli Dadao, Guangzhou
Applicant's name.....:	Guangzhou Leqi Amusement Equipment Co.,LTD
Address .....:	No.33, Tai An Road, Da Long Street, Pan Yu Dist, GuangZhou, China
Test specification:	
Standard.....:	F1487 – 21
Test procedure .....:	SCT
Non-standard test method……..:	N/A
Test Report Form No. .....:	F1487 – 21
Test Report Form(s) Originator.....:	SCT
Master TRF .....:	2023-09
Test item description .....:	Indoor Playground
Trade Mark.....:	LUCKYPLAY
Manufacturer .....:	Guangzhou Leqi Amusement Equipment Co.,LTD
Address .....:	No.33, Tai An Road, Da Long Street, Pan Yu Dist, GuangZhou, China
Factory .....:	Guangzhou Leqi Amusement Equipment Co.,LTD
Address .....:	No.33, Tai An Road, Da Long Street, Pan Yu Dist, GuangZhou, China
Model/Type reference .....:	INDOOR01

Copy of marking plate:

Guangzhou Leqi Amusement Equipment Co.,LTD

Indoor Playground

Model: INDOOR01

F1487 – 21

No.33, Tai An Road, Da Long Street, Pan Yu Dist, GuangZhou, China

General remarks:

The test results presented in this report relate only to the object tested.
This report shall not be reproduced, except in full, without the written approval of the Issuing testing laboratory.
"(See Enclosure #)" refers to additional information appended to the report.
"(See appended table)" refers to a table appended to the report.

Throughout this report a point is used as the decimal separator.

Summary of testing:

The submitted sample was complied with F1487 – 21

Possible test case verdicts:

- test case does not apply to the test object .....: N/A
- test object does meet the requirement.....: P(Pass)
- test object does not meet the requirement.....: F(Fail)

Testing .....:

Date of receipt of test item .....: 2023-06-12

Date (s) of performance of tests .....: 2023-06-12 to 2023-09-19

Clause	Requirement + Test	Result - Remark	Verdict
4.	**Materials and Manufacture**		—
4.1	*General Requirements*—Playground equipment shall be manufactured and constructed only of materials that have a demonstrated durability in the playground or similar outdoor setting. Any new materials shall be documented or tested accordingly for durability by the playground equipment manufacturer.		P
4.1.1	Metals subject to structural degradation such as rust or corrosion shall be painted, galvanized, or otherwise treated. Woods shall be naturally rot- and insect-resistant or treated to avoid such deterioration. Plastics and other materials that experience ultraviolet (UV) degradation shall be protected against ultraviolet light.		P
4.1.2	Regardless of the material or the treatment process, the manufacturer shall ensure that the users of the playground equipment cannot ingest, inhale, or absorb any potentially hazardous amounts of substances through body surfaces as a result of contact with the equipment. All materials content shall comply with the Consumer Product Safety Improvement Act of 2008 (CPSIA) (this includes but is not limited to coating and substrate).		P
4.1.3	Wood intended for playground equipment that is not naturally rot- and insect-resistant shall be treated to resist rot and insect attack from standard procedures. Any wood not naturally rot- and insect-resistant, which has any fabrication up to 6 in. (150 mm) above, or any portion at or below the level of the protective surface of the playground, shall be treated after wood fabrication. Deviations shall have independent documentation of durability. Chromated copper arsenate (CCA), creosote, pentachlorophenol, tributyl tin oxide, and surface coatings that contain pesticides shall not be used for playground equipment.		P
4.2	All fasteners used to construct public playground equipment shall meet the requirements of Section 4.		P
4.2.1	All fasteners, connecting, and covering devices shall be inherently corrosion resistant or be provided with a corrosion-resistant coating.		P
4.2.2	When installed in accordance with the manufacturer's instructions, fasteners, connecting, and covering devices shall not loosen or be removable without the use of tools. Lock washers, self-locking nuts, or other locking means shall be provided for all nuts and bolts to protect them from detachment. Hardware in moving joints shall also be secured against unintentional loosening.		P
4.2.3	Moving suspended elements shall be connected to the fixed support with bearings or bearing surfaces that serve to reduce friction or wear.		N/A

Clause	Requirement + Test	Result - Remark	Verdict
4.2.3.1	Steel cable that is permanently affixed to a hanger assembly performs as a bearing surface. Cable ends should be inaccessible or capped to prevent injury from frayed wires. Cables and steel-cored ropes should be protected to prevent fraying, loosening, unraveling, or excessive shifting of joints.		N/A
4.2.4	Hooks and connecting devices shall be subject to the requirements of 6.4.5.		N/A
4.3	*Tires:*		P
4.3.1	Tires shall not trap water.		P
4.3.2	Tires shall not have exposed steel belts.		P
5.	**General Requirements**		—
5.1	Playground equipment represented as complying with this consumer safety performance specification shall meet all applicable requirements specified herein. Anyone representing compliance with this specification shall keep such essential records as are necessary to document any claim that the requirements within this specification have been met.		P
5.2	Play equipment designed for a specific age group (2 through 5, 5 through 12, 2 through 12) shall have all play activities on that equipment meet the requirements for that age group.		P
5.3	Play structures shall be anchored to the ground or not be intended to be relocated.		P
5.4	*Small Parts*—When installed in accordance with the manufacturer's instructions, equipment for children under 3 years of age shall meet the requirements of 16 CFR Part 1501.		P
6.	**Performance Requirements**		—
6.1	*Head and Neck Entrapment*—Public playground equipment shall be designed and constructed or assembled so that any accessible opening shall meet the following performance requirements to reduce the risk of accidental head or neck entrapment by either a head-first or feet-first entry into the opening. Openings between the protective surfacing and the bottom edge of the equipment (that is, rails, platforms, steps, and so forth) are exempt from this requirement as indicated by Fig. A1.1.		P
6.1.1	*Accessible Openings*—A completely bounded rigid opening is accessible when a torso test probe (see Fig. A1.2) can be inserted into the opening to a depth of 4.0 in. (102 mm) or more.		P

Clause	Requirement + Test	Result - Remark	Verdict
6.1.1.1	*Test Procedure for Completely Bounded Rigid Openings*—Place the torso probe (see Fig. A1.2) in the opening with the plane of the base of the probe parallel to the plane of the opening; rotate the probe to its most adverse orientation (that is, major axis of the base of the probe parallel to the major axis of opening). If the torso probe can be inserted into the opening to a depth of 4.0 in. (102 mm) or more, place the head probe (see Fig. A1.3) in the opening with the plane of the base of the probe parallel to the plane of the opening. An opening passes this test if (*1*) the opening does not admit the torso probe when it is rotated to any orientation about its own axis, or (*2*) the opening admits the torso probe and also admits the head probe. An opening fails the test if the opening admits the torso probe but does not admit the head probe.		P
6.1.2	*Non-rigid Completely Bounded Openings*—A nonrigid opening such as may be found in but not limited to flexible nets, tarps, and plastic enclosures is considered accessible if a torso probe will penetrate the opening to a depth of 4.0 in. (102 mm) or more when tested in accordance with the test procedure outlined in 6.1.2.1 (see Figs. A1.2 and A1.3 for probe dimensions).		P
6.1.2.1	*Test Procedure for Completely Bounded Non-rigid Openings*—Place the torso probe in the opening, tapered-end first, with the plane of its base parallel to the plane of the opening; rotate the probe to its most adverse orientation (that is, the major axis of the base of the probe parallel to the major axis of the opening); apply a force of 50 lbf (222 N) to the probe to attempt to pass it through the opening. If the base of the probe passes through the opening, place the large head probe in the opening, tapered end first, with the plane of its base parallel to the plane of the opening. Apply a force of 50 lbf (222 N) to the probe to attempt to pass it through the opening. A non-rigid opening passes the test if: (*1*) the opening does not allow the torso probe to be inserted so deep that the opening admits the base of the probe when it is rotated to any orientation about its own axis, or (*2*) the opening allows full passage of the torso probe and also allows the large head probe to pass completely through. A non-rigid opening fails the test if the opening allows full passage of the torso probe but does not admit the large head probe		P
6.1.3	*Boundaries of Large Openings*—If the opening admits the 9.0-in. (229-mm) head probe, each portion of its boundary shall be evaluated for partially bounded opening requirements of 6.1.4.		P
6.1.4	*Partially Bounded Openings:*		P

Clause	Requirement + Test	Result - Remark	Verdict
6.1.4.1	A partially bounded opening is considered accessible when any of the following conditions exist, and must meet the performance requirements as recommended in 6.1.4.2 and 6.1.4.3.		P
6.1.4.2	If the unbounded part of a partially bounded opening is between 1.875 6 0.005 in. (47.6 mm) and 9.0 in. (229 mm) in width when measured perpendicular to each surface, the opening can be considered accessible and must meet the conditions of 6.1.4.3.		P
6.1.4.3	*Test Method*—The "A" portion of the test template (Fig. A1.4) is to be inserted along the centerline of the opening (determine the most adverse condition) (see Fig. A1.5) so that the centerline of the template follows the centerline of the opening and the plane of the template is parallel to the plane of the opening until the motion is arrested by contact between the test template and the boundaries of the opening. By visual inspection, determine if there is simultaneous contact between the sides of the template. If simultaneous contact is made the opening is accessible and must be tested using the "B" portion of the test template (see Fig. A1.6).		P
6.1.4.4	If the angle test template "A" indicates failure, check for an exempted thick surface condition by positioning the plane of the "B" portion of the test template between and perpendicular to the plane of the boundaries of the opening (see Fig. A1.7 and Fig. A1.9). If the test template fits completely within the boundaries of the opening, the opening is considered hazardous and fails the test unless it allows full passage of the 9.0-in. (229 mm) head probe (see Fig. A1.8). If the template does not fit down within the boundaries of the opening (defined as the opening outlined by the contact points of the test template "A") the opening is not considered accessible.		P
6.1.4.5	The test template is divided into two sections. Section "A" is used first to determine accessibility and is based on the Specification F1004 standard rationale. Section "B" is used to determine if the thickness of the material or the location of the opening prevents access to the opening. The thickness of 0.75 in. (19.1 mm) for the template itself is based on half of the neck depth of a 5th percentile two year old minus compression. This dimension is consistent with Specification F1004.		P
6.1.4.6	Other dimensions are based on the following: *(1)* 6.1 in. (155 mm) width represents 95th percentile 5 year old head width, *(2)* 1.875 6 0.005 in. (47.6 mm) is the neck breadth of the 5th percentile 2 year old (2.5 in. (64 mm) minus tissue compression), *(3)* 8.5 in. (216 mm) shoulder width of 5th percentile 2 year old, and *(4)* 3.0 in. (76 mm) neck length of a five year old.		P

Clause	Requirement + Test	Result - Remark	Verdict
6.1.4.7	*Exemption to 6.1.4:* *(1)* Those partially bounded openings which are inverted.A partially bounded opening is considered inverted if the lowest interior boundary immediately adjacent to the opening is horizontal or slopes downward. *(2)* Partially bounded openings that form “V” angles less than 55° where the apex of the angle is formed by an inclined or vertical climbing surface and a rope, chain or cable are exempt if the rope, chain or cable are in contact with the inclined surface at or below the protective surface at the point of the formed “V” angle. *(3)* Partially bounded openings where simultaneous contact of the “A” portion of the template is less than 24 in. (610 mm) above the protective surfacing.		P
6.2	*Sharp Points and Sharp Edges*—There shall be no accessible sharp points or sharp edges on public play equipment.		P
6.2.1	All points and edges on public play equipment shall be tested for sharpness in accordance with the requirements in 16 CFR 1500.48 and 1500.49 referenced in 2.3.		P
6.2.2	The exposed open ends of tubing shall be provided with caps or plugs that cannot be removed without the use of tools. Chimes, tubes, and other musical equipment is exempt from this requirement; however, the tube edges shall meet 6.2.1.		P
6.2.3	Suspended members, such as rings on upper body equipment and swing seats, shall have a minimum radius of 0.25 in. (6.4 mm) on corners and edges. This requirement does not apply to swing belt seats, straps, ropes, chains, connectors, and other flexible components.		P
6.2.4	Acut-off bolt end projecting beyond the face of the nut shall be free of burrs, sharp points, and sharp edges.		P
6.3	*Protrusions*—There shall be no protrusions on public play equipment. Three projection test gauges (shown in Fig. A1.10) and a projection gauge (shown in Fig. A1.11) are required to determine whether projections are protrusions. Their use is described in this section.		P
6.3.1	*Accessible Projections*—A projection is not accessible and is not a protrusion when it is recessed or located in such a manner that will not allow any of the projection test gauges to be placed over it. Any of the conditions described in the remainder of this section constitute a protrusion hazard.		P

Clause	Requirement + Test	Result - Remark	Verdict
6.3.2	*Determining Whether a Projection is a Protrusion*—Successively place each of three gauges (see Fig. A1.10) over each accessible projection in all orientations (see Fig. A1.12 and Fig. A1.13). Determine whether the projection extends beyond the face of any gauge. The projection fails the test and is a protrusion if it extends beyond the face of any of the three gauges.		P
6.3.2.1	*Exemption to Protrusion Criteria*—A manipulative device attached to a rope, cable, or chain is exempt from meeting the projection criteria using the large 3-in. (76.2 mm) interior diameter projection gauge. The use of the smaller gauges still applies.		P
6.3.3	*Swing Seat Protrusions*—Test for this condition with the suspended member in all positions of its intended travel. Keeping the projection test gauge (see Fig. A1.11) oriented vertically, and its axis parallel to the plane of travel, place it over any projection accessible throughout the path of travel. Any projection on the suspended member which extends beyond the face of the test gauge is a protrusion.		N/A
6.4	*Entanglement*—There shall be no entanglement hazards on public play equipment. Three test gauges, a feeler gauge, and the means to accurately measure a 0.12 in. (3.0 mm) extension are required to determine whether entanglement hazards exist. Any of the conditions described in this section constitutes an entanglement hazard.		P
6.4.1	*Slides*—The following requirements apply to slides in the areas shown in Fig. A1.14. Examples are shown in Fig. A1.15, Fig. A1.16, Fig. A1.17 and Fig. A1.23.		P
6.4.1.1	A projection that meets both of the following requirements is an entanglement hazard: *(1)* One of the three projection gauges (see Fig. A1.10) passes over the projection and contacts the initial surface. *(2)* The projection extends perpendicular (65°) from the initial surface more than 0.12 in. (3.0 mm). The thickness of the projection gauge (see Fig. A1.11) may be used to measure the 0.12 in. (3.0 mm) extension.	The height (H) of the end of the run-out section were 1.5m; The run-out section long 3.0m There's a fence around it on the both sides.	P
6.4.1.2	Slides shall be constructed in such a manner as to provide a continuous sliding surface (roller slides exempted) and shall minimize the likelihood of entanglements.		P
6.4.2	*Projections from a Horizontal Plane*—A projection that meets the conditions of 6.4.1.1 (*1*) and (*2*) and which also projects upwards from a horizontal plane (see Figs. A1.15- A1.17) is an entanglement hazard.		P

Clause	Requirement + Test	Result - Remark	Verdict
6.4.3	*Exposed Bolt End Projections*—Any accessible bolt end projecting beyond the face of the nut more than two full threads is an entanglement hazard (see Fig. A1.15(6)). A bolt end is inaccessible and not an entanglement hazard when the bolt end is recessed and the 3.5 in. (89 mm) OD projection gauge (see Fig. A1.10) cannot be made to contact the bolt end when the outside curve of the gauge is placed flat against the recessed area (see Fig. A1.18).		P
6.4.4	*Projections Which Increase in Size*—Any projection which fits within any of the three projection test gauges (see Fig. A1.10) and where the increase in size extends greater than 0.12 in. (3.0 mm) from the initial surface with a depth greater than 0.12 in. (3.0 mm) is an entanglement hazard (see Fig. A1.15).		P
6.4.5	*Connecting Devices*—Connecting devices such as, but not limited to, S-hooks and C-hooks, when properly closed, are not entanglement hazards. These connectors are considered closed when there is no gap or space greater than 0.04 in. (1.0 mm) when measured with a feeler gauge (see Fig. A1.19(1)).		P
6.4.5.1	S-hook connectors are subject to these further requirements. If any of the following requirements are not met, an entanglement hazard exists: *(1)* No portion of the closed end of an S-hook lower loop may project beyond the vertical boundary established by the upper loop (see Fig. A1.19(2)). *(2)* An S-hook upper loop may align with, may partially overlap, or may completely overlap the connector body. If the upper loop completely overlaps the connector body, it must not extend past the connector body (see Fig. A1.19(3)). *(3)* An S-hook lower loop must align with the connector body and not overlap it in any way (see Fig. A1.19(4)).		P
6.4.5.2	*Exemptions to 6.4.5:* *(1)* Connecting devices that have an in-fill such as plastic or cable that completely fills the interior space of both loops preventing entry of items of clothing into the interior of the connecting device.		P
6.5	*Crush and Shear Points*—There shall be no crush or shear points caused by junctures of two components moving relative to one another, or at an opening present at the junction of a stationary support and a rigid supporting member for a swinging element (that is, pendulum see saw, glide rides, and so forth) while the swinging elements are within their normal swinging angles. A crush or shear point is any point that entraps at one or more positions a 0.62 in. (15.7 mm) diameter rod.		P
6.5.1	To reduce the likelihood of unintentional contact with a crush or shear point, an opening shall comply with either 6.5.1.1 or 6.5.1.2.		P

Clause	Requirement + Test	Result - Remark	Verdict
6.5.1.1	An opening with a minor dimension of less than 1.0 in. (25 mm) is acceptable if a finger probe (as illustrated in Fig. A1.20), when inserted point first into an opening, cannot be made to touch any crush or shear point. The probe shall be applied in all possible articulated positions with an application force not to exceed 1 lb (4 N).		P
6.5.1.2	An opening in an enclosure with a minor dimension of 1.0 in. (25 mm) or more, shall require that the crush or shear point be located at a distance as specified in Table 1 from the plane of the opening. An enclosure in this case covers a crush or shear point.		P
6.5.1.3	*Exemptions to 6.5:* *(1)* Chain and its method of attachment, *(2)* The attachment area of heavy duty coil springs to the body and base of rocking equipment, *(3)* The area between a swinging element and a horizontal toprail, and *(4)* The area between small, lightweight moving parts necessary as an integral part of the play activity (for example, abacus beads, bell clappers, telephone receivers, etc.) provided that this area is not considered a crush or shear point as defined in 3.1.9.		P
6.6	*Suspended Hazards*—There shall be no single non-rigid component (cable, wire, rope, or other similar component) suspended between play units or from the ground to the play unit within 45° of horizontal, unless it is above 84 in. (2130 mm) from the playground surface and is a minimum of 1.0 in. (25 mm) at its widest cross-section dimension. It is recommended that the suspended elements be either brightly colored or contrast with surrounding equipment to add to visibility.		P
6.6.1	Rope, cable, or chain shall be fixed at both ends and not be capable of being looped back on itself, creating an inside loop perimeter greater than 5.0 in. (127 mm).		P
6.6.2	*Exemptions for Suspended Components (Rigid or Flexible):*		P
6.6.2.1	Multiple (two or more) suspended components (cables, wire, rope, or similar components) located at two or more elevations, may be suspended below 84 in. (2130 mm) when they comply with all other aspects of the single suspended component section and cannot be looped or stretched to contact another suspended component(s).		P
6.6.2.2	Chain or cable used to support a swing is exempt from this requirement. Rope shall not be used as a method of suspending swings.		P
6.6.2.3	Rope, cable, or chain with a length of 7.0 in. (178 mm) or less may be attached at one end only. Multiple lengths of such cords that can contact each other would be treated as one length of cord.		P

Clause	Requirement + Test	Result - Remark	Verdict
6.6.2.4	Climbing net structures shall be exempt from 6.6 but still must meet the requirements of 6.6.1.		P
6.6.2.5	For ground level components, ropes, chain or cable used to attach manipulative components (for example, Mallet for chime panel) to play panels or similar activities shall not be longer than 24 in. (609 mm). The attachment point of the cable to the panel shall not be higher than 27 in. (686 mm) above the underlying surface.		P
7.	**Requirements for Access/Egress**		—
7.1	*Accessible Routes to a Play Structure:*		P
7.1.1	Accessible routes within a use zone shall conform to the performance requirements of Specifications F1292 and F1951.		P
7.1.2	Ramps, platforms, or other stationary bridges, when used to connect an elevated access from the perimeter of the playground to the play equipment, shall be exempt from the use zone fall requirements where the connection is made at the perimeter (see Fig. A1.46).		P
7.2	*Rung Ladders, Stepladders, Stairways, and Ramps:*		P
7.2.1	Steps and rungs shall be evenly spaced within a tolerance of 60.25 in. (66.4 mm) and horizontal within a tolerance of 62°.		P
7.2.2	Steps and rungs shall not trap water (that is, no standing water) and should not encourage the accumulation of debris.		P
7.2.3	See Table 2 for access slope; tread, rung, or ramp width; tread depth; ladder rung diameter; and vertical rise		P
7.2.4	Ramps that are a component of a play structure and intended to provide wheelchair access shall have a horizontal run between landings not to exceed 144 in. (3660 mm) (see Fig. A1.46).		P
7.2.5	Landings with play components shall include space for a wheelchair user to park and play with an adjacent circulation path not less than 36 in. (910 mm) wide (see Fig. A1.46).		P
7.2.6	*Handrails:*		P
7.2.6.1	Continuous handrails shall be provided on both sides of stairways (see 7.3.1.3 for spiral stairways), ramps, and stepladders that have more than one tread. *(1) Exemptions*—Stairways do not require handrails where protective barriers are used. Barriers on stairways must provide alternate hand support.		P
7.2.6.2	Stairways or stepladders consisting of only one tread shall have handrails or alternate means of hand support on both sides.		P
7.2.6.3	Handrails or other means of hand support shall be available for use at the beginning of the first step.		P

Clause	Requirement + Test	Result - Remark	Verdict
7.2.6.4	Handrails shall be between 0.95 and 1.55 in. (24 and 39 mm) in diameter or maximum cross section.		P
7.2.6.5	Handrail height (the vertical distance between the top front edge of a step or, if used on a ramp, the top of the ramp surface, and the top surface of the handrail above it) shall be between 22 and 38 in. (560 and 970 mm).		P
7.3	*Other Means of Access:*		P
7.3.1	*Spiral Stairways:*		N/A
7.3.1.1	Spiral stairways shall meet the general requirements for spacing, orientation, drainage, tread width, and vertical rise specified for stairway access in 7.2.1 – 7.2.3.		N/A
7.3.1.2	The depth of the outer edge of the tread on spiral stairways shall be 7.0 in. (178 mm) or greater on equipment for children 2 through 5 years, and 8.0 in. (203 mm) or greater on equipment for children 5 through 12 years. These depth requirements apply to spiral stairways with both open and closed risers.		N/A
7.3.1.3	Spiral stairways shall meet the requirements specified for handrails in 7.2.6. However, when the design of the stairway does not permit handrails on both sides of the stairway, a continuous handrail shall be provided along the outside perimeter of the steps.		N/A
7.3.2	*Climbers:*		P
7.3.2.1	Arch climbers and flexible climbers shall not be used as the sole means of access to other components of equipment intended for use by 2 to 5 year olds.		P
7.3.2.2	Flexible climbing components shall be securely connected at both ends. When one end is connected to the ground and the flexible component is not vertically shielding the anchoring device, the anchoring device shall be beneath the base of the minimum required depth of the protective surfacing material. Where unitary surfacing material is used, a maintenance access opening is permissible, provided that the anchoring device is not accessible when tested with the 3.50 in. (88.9 mm) O.D. projection gauge (Fig. A1.10) as in Fig. A1.18. Tensioning devices are not considered to be part of the anchoring device.		P
7.3.2.3	Connections between ropes, cables, chains, or tires used as access to other components of equipment shall be securely fixed.		P
7.3.2.4	Flexible components used as access to other components of equipment for use by 2 through 5-year-olds shall readily allow users to bring both feet to the same level before ascending to the next level.		P
7.3.2.5	Climbers used as access shall provide a means of hand support for use while climbing.		P
7.4	*Transition from Access to Platform:*		P

Clause	Requirement + Test	Result - Remark	Verdict
7.4.1	On stairways and stepladders, there shall be a continuation of handrails from the access to the platform.		P
7.4.2	On accesses that do not have side handrails, such as rung ladders, arch climbers, or flexible climbers, there shall be alternate hand gripping support to facilitate the transition to the platform.		P
7.4.3	For rung ladders, flexible climbers, and arch climbers, the stepping surface used for final access shall not be above the designated play surface it serves.		P
7.5	*Platforms, Landings, Walkways, Ramps, and Similar Transitional Play Surfaces:*		P
7.5.1	Platform surfaces shall be horizontal within a tolerance of 62°.		P
7.5.2	Platforms, landings, walkways, ramps, and similar transitional play surfaces shall not trap water and should not encourage accumulation of debris.		P
7.5.3	Platforms, landings, walkways, ramps, and similar transitional play surfaces that are elevated above the protective surfacing and that are accessible to wheelchairs shall provide a clear width of not less than 36 in. (910 mm). Clear width may be reduced to 32 in. (810 mm) for not more than 24 in. (610 mm) along the path of travel (see Fig. A1.48).		P
7.5.4	Turning spaces and parking spaces provided at a transfer point on wheelchair-accessible platforms shall not overlap (see Fig. A1.47).		P
7.5.5	Guardrails shall be provided on platforms, landings, walkways, ramps, and similar transitional play surfaces, in accordance with 6.1, 7.5.5, and 7.5.6. Guardrails shall contain no designated play surfaces. Guardrails are not intended to surround the designated play surfaces on play equipment (for example, balance beams and climbers) unless required in Section 8.		P
7.5.5.1	Guardrails or protective barriers are required on elevated surfaces that are greater than 20 in. (508 mm) above the protective surfacing when intended for use by 2- through 5-year-olds, on elevated surfaces greater than 30 in. (760 mm) above the protective surfacing when intended for use by 5- through 12-year-olds, and on all elevated wheelchairaccessible platforms except as specified in 7.5.5.2 and 7.5.6.3 (see Fig. A1.49).		P

Clause	Requirement + Test	Result - Remark	Verdict
7.5.5.2	Guardrails shall completely surround the elevated surface except for entrance and exit openings necessary for each event. *(1)* The maximum clear opening without a top horizontal guardrail shall be 15 in. (380 mm). *(2)* Means of ascent and descent that are accessible by openings with horizontal dimensions greater than 15 in. (380 mm) shall have a minimum of one top rail of a guardrail. *(3)* Stairs, ramps, and upper body components, or components that provide a transfer point (system) or entry point as defined in the DOJ 2010 Standard for Accessible Design are exempt from this requirement. *(4)* Professional judgment shall be used in the design and placement of all openings on wheelchair-accessible, elevated surfaces, and a means provided to prevent wheelchairs from falling off.		P
7.5.5.3	The top surface of guardrails shall have a height 29 in. (740 mm) or greater when the elevated surface is for use by 2 through 5-year-olds, and 38 in. (970 mm) or greater when for use by 5 through 12-year-olds.		P
7.5.5.4	The lower edge of guardrails on elevated surfaces intended for 2 through 5-year-olds shall be no greater than 23 in. (580 mm) above the underlying equipment surface. For elevated surfaces intended for 5 through 12-year-olds, the lower edge of the guardrails shall be no greater than 28 in. (710 mm) above the underlying equipment surface.		P
7.5.5.5	Wheelchair-accessible ramps less than or equal to 30 in. (760 mm) above the protective surface of the use zone, when designed for use by 2- through 5-year-olds, or less than or equal to 48 in. (1220 mm), when designed for use by 5- 12-year-olds, shall have two handrails on each side of the ramp that are 26 to 28 in. (660 to 710 mm) and 12 to 16 in. (300 to 410 mm) high and conform to 7.2.6.3 and 7.2.6.4. Ramp height shall be measured at the highest point (see Fig. A1.46).		N/A
7.5.5.6	Wheelchair-accessible ramps must have a curb projecting above the ramp a minimum of 2.0 in. (51 mm) at both edges when any of the following conditions are present (see Fig. A1.46): *(1)* Guardrails or barriers not extending to within 1.0 in. (25 mm) of the ramp surface, *(2)* Ramps with two rails and no barrier, or *(3)* Ramps where the barrier is beyond the edge of the ramp surface.		N/A
7.5.6	Protective barriers shall contain no designated play surfaces and shall minimize the likelihood of climbing. Barriers are not intended to surround the designated play surfaces on play equipment (for example, balance beams and climbers) unless required in Section 8.		P

Clause	Requirement + Test	Result - Remark	Verdict
7.5.6.1	Protective barriers are required on elevated surfaces greater than 30 in. (760 mm) above the protective surfacing when intended for use by 2 through 5-year-olds, and greater than 48 in. (1220 mm) above the protective surfacing when intended for use by 5 through 12-year-olds. Ramp height shall be measured at the highest point. *(1)* On stairways, all steps greater than 48 in. (1220 mm) above the protective surfacing shall require protective barriers. *(2)* The height of the protective barrier on a step shall be the vertical distance between the top front edge of a step and the top surface of the protective barrier.		P
7.5.6.2	Wheelchair-accessible ramps that require barriers shall have a handrail 26 to 28 in. (660 to 710 mm) high on each side of the ramp.		N/A
7.5.6.3	Protective barriers shall completely surround the elevated surface except for entrance and exit openings necessary for each event. *(1)* The maximum clear opening without a top horizontal guardrail shall be 15 in. (380 mm). *(2)* Means of ascent and descent that are accessible by openings with horizontal dimensions greater than 15 in. (380 mm) shall have a minimum of one top rail of a guardrail. *(3)* Stairs, ramps, and upper body equipment are exempted from this requirement. *(4)* Professional judgment shall be used in the design and placement of all openings on wheelchair-accessible, elevated surfaces and a means provided to prevent wheelchairs from falling off.		P
7.5.6.4	The top surface of protective barriers shall have a height 29 in. (740 mm) or greater when the elevated surface is for use by 2 through 5-year-olds, and 38 in. (970 mm) or greater when intended for use by 5 through 12-year-olds.		P
7.5.6.5	Openings within barriers or between the platform surface and lower edge of protective barriers shall preclude passage of the torso probe (see 6.1.1).		P
7.5.7	*Adjacent Platforms:*		P
7.5.7.1	Adjacent platforms between which access is intended that have a height difference greater than 12 in. (300 mm) when intended for use by 2 through 5-year-olds, and greater than 18 in. (460 mm) when intended for use by 5 through 12-year-olds shall require an access component (see Fig. A1.21).		P
7.5.7.2	Access components between adjacent platforms shall comply with the requirements of 7.4.		P

Clause	Requirement + Test	Result - Remark	Verdict
7.5.7.3	Guardrail and protective barriers on adjacent platforms shall meet the requirements specified for other platforms in 7.5.5 and 7.5.6 except areas between platforms that do not permit the full barrier height. In these areas, protective infill shall be used (see Fig. A1.21).		P
7.5.7.4	The upper platform of adjacent platforms, between which access is intended, shall have guardrails or protective barriers on the side adjacent to the lower platform. The height difference between adjacent platforms is used to determine if a guardrail or barrier is required. Guardrails or barriers are required on the upper platform when the height difference exceeds 20 in. (508 mm) for 2 through 5 year olds and 30 in. (760 mm) for 5 through 12 year olds. Protective barriers are required on the upper platform when the height difference exceeds 30 in. (760 mm) for 2 through 5 year olds and 48 in. (1220 mm) for 5 through 12 year olds. The guardrails or protective barriers shall meet the requirements of 7.5.5 and 7.5.6, exempting 7.5.5.1 and 7.5.6.1.		P
8.	**Equipment**		—
8.1	*Balance Beams:*		N/A
8.1.1	The top surface of balance beams shall be no greater than 12 in. (300 mm) above the protective surfacing when intended for use by 2 through 5-year-olds, and no greater than 16 in. (410 mm) above the protective surfacing when intended for use by 5 through 12-year-olds.		N/A
8.1.2	Support posts for balance beams shall not pose a tripping hazard.		N/A
8.1.3	The fall height of balance beams shall be the distance between the highest part of the walking surface and the protective surface below.		N/A
8.2	*Climbers:*		P
8.2.1	Rigid rungs that are used for hand support during ascent and descent of climbing apparatus shall be between 0.95 in. (24.1 mm) and 1.55 in. (39.4 mm) in diameter and shall not twist/rotate about its own axis. Flexible components (that is, rope, cable, chain) used as handgripping components shall be between 0.62 and 1.55 in. (16 and 39.4 mm) in diameter		P
8.2.2	Flexible components (for example, nets, chains, tires, and so forth) of stand-alone climbing structures shall meet the same requirements as those specified in 7.3.2 for components that provide access to or linkage between structures.		P
8.2.3	The fall height of climbers used for access/egress from or to composite play structures shall be the distance between the highest part of the climber intended for foot support and the protective surface below.		P

Clause	Requirement + Test	Result - Remark	Verdict
8.2.4	The fall height of free standing climbers (e.g., geodesic domes, free standing climbing walls) shall be the distance between the highest part of the climbing component and the protective surface below.		P
8.2.5.1	The mesh structure shall be arranged in a manner so there is no clear opening between flexible members with a vertical dimension greater than 72 in. (1829 mm) and a diameter greater than 18 in. (457 mm) for climbing nets intended for 2 through 5-year-olds, and a diameter greater than 20 in. (508 mm) for climbing nets intended for 5 through 12-year-olds. (See Fig. A1.54.)		P
8.2.5.2	The fall height for 3-dimensional matrix nets shall be the highest distance of either the interior or exterior fall height. The minimum fall height for structures with an overall height greater than 72 in. (1829 mm) shall be 72 in. *(1)* The exterior fall height shall be the distance from the protective surfacing to the highest point at which a rigid vertical device contacts the climbing net structure when moved around the perimeter. (See Figs. A1.55-A1.57.) *(2)* The interior fall height shall be the distance between the protective surfacing and the highest member where there is a clear vertical path to the protective surfacing with a diameter of 18 in. (457 mm) for climbing nets intended for 2 through 5-year-olds, and with a diameter of 20 in. (508 mm) for climbing nets intended for 5 through 12-year-olds. (See Figs. A1.55-A1.57.)		P
8.2.5 *3*	*-Dimensional Climbing Net Structure:*		P
8.3	*Upper Body Equipment:*		N/A
8.3.1	The center-to-center distance between rungs on upper body equipment with fixed handholds shall be no greater than 15.0 in. (381 mm).		N/A
8.3.1.1	Rigid surfaces of all handgrip devices on upper body equipment shall be between 0.95 in. (24.1 mm) and 1.55 in. (39.4 mm) in diameter and shall not twist/rotate about its own axis.		N/A
8.3.2	The horizontal distance from the leading edge of the take-off or landing structure, or both, out to the first handhold of upper body equipment shall be no greater than 10 in. (250 mm). In addition, where the take-off or landing point is provided by means of rungs, the horizontal distance to the first handhold shall be at least 8 in. (200 mm) but no greater than 10 in. (250 mm).		N/A

Clause	Requirement + Test	Result - Remark	Verdict
8.3.3	The maximum height of upper body devices for use by 2 through 5-year-olds shall be no greater than 60 in. (1524 mm), measured from the center of the grasping device to the top of the protective surfacing below. The maximum height of upper body devices for use by 5 through 12-year-olds shall be no greater than 84 in. (2130 mm). Upper body equipment intended for users in wheelchairs shall have grasping devices no greater than 54 in. (1370 mm) above the accessible surface (see Fig. A1.50).		N/A
8.3.4	The maximum height of the take-off/landing structure for upper body equipment shall be no greater than 18 in. (460 mm) above the protective surfacing on equipment for 2 through 5-year-olds, and no greater than 36 in. (910 mm) above the protective surfacing on equipment for 5 through 12-year-olds.		N/A
8.3.5	For moveable hanging rings and hanging rungs, the distance between the uppermost pivot and the bottom of the handgrip device shall be no greater than 15.0 in. (381 mm). Any flexible elements (chain, cable, connectors such as “S” hooks, and so forth) used to suspend the ring or rung, shall have a total length no greater than 7.0 in. (178 mm) (see Fig. A1.30 and Fig. A1.52).		N/A
8.3.6	The fall height of upper body equipment shall be the distance between the highest part of the equipment and the protective surface below. Equipment support posts with no designated play surfaces are exempt from this requirement.		N/A
8.4	*Sliding Poles:*		N/A
8.4.1	Clearance distances from structures to the pole shall be between 18 in. (460 mm) and 20 in. (508 mm).		N/A
8.4.2	When accessed from a platform, access to the sliding pole shall be from one height only.		N/A
8.4.3	A sliding pole accessed from a platform shall rise 60 in. (1524 mm) or greater above the surface of the platform.		N/A
8.4.4	The pole shall be no greater than 1.9 in. (48 mm) in diameter.		N/A
8.4.5	The sliding portion of the sliding pole shall be continuous, with no protruding welds, joints or abrupt changes in direction.		N/A
8.4.6	The guardrail or protective barrier at a platform entrance/exit opening shall have an opening with a maximum horizontal dimension of 15 in. (380 mm).		N/A
8.4.7	The fall height of sliding poles shall be 60 in. (1524 mm) below the highest portion of the pole to the protective surfacing below.		N/A
8.5	*Slides:*		P
8.5.1	Accesses to slides shall meet the same requirements as those for playground equipment in general, as specified in Section 7 (embankment slides excepted).		P

Clause	Requirement + Test	Result - Remark	Verdict
8.5.2	*Slide Transition Platforms:*		P
8.5.2.1	Slide transition platforms shall meet the same requirements for orientation, drainage, guardrails, and protective barriers specified for platforms on other playground equipment in 7.5.		P
8.5.2.2	The depth of the transition platform on slides shall be 14 in. (360 mm) or greater.		P
8.5.2.3	The transition platform shall have a width equal to or greater than the width of the sliding chute at the entrance.		P
8.5.3	*Slide Chute Entrance:*		P
8.5.3.1	Handrails or other means of hand support shall be provided at the slide chute entrance to facilitate the transition from standing to sitting.		P
8.5.3.2	At the slide chute entrance, there shall be a means to channel the user into a sitting position (for example, guardrail, hood, and so forth).		P
8.5.4	*Slide Chute:*		P
8.5.4.1	The height/length ratio of the sliding surface shall not exceed 0.577. For spiral slides and other curved slides, the length shall be measured as the horizontal projected path of the user. (See Fig. A1.22.)		P
8.5.4.2	No span of the sliding surface shall have a slope that exceeds 50°.		P
8.5.4.3	The slide chute inside width shall be 12 in. (300 mm) or greater for 2 through 5-year-olds, or 16 in. (410 mm) or greater for 5 through 12-year-olds.		P
8.5.4.4	Slides with flat, open chutes shall have sidewalls with a height 4.0 in. (102 mm) or greater, that extend along both sides of the chute for the entire length of the sliding surface.		P
8.5.4.5	Straight slides may have a chute with a circular, semicircular, or curved cross section, provided that: (*1*) the height of the sidewall is 4.0 in. (102 mm) (y) or greater when measured at right angles above a horizontal line (x) that is 12.0 in. (305 mm) long when intended for 2 through 5-year-olds or 16.0 in. (406 mm) long when intended for 5 through 12-yearolds (see Fig. A1.23), or (*2*) the vertical sidewall height (H) of such slides are a minimum of 4.0 in. (102 mm) minus 2 times the width of the bedway (W) divided by the radius (R) of the bedway curvature, as follows (see Fig. A1.24): $H\,(\text{in.}) = 4 - \left(\frac{2W}{R}\right)$		P
8.5.4.6	All slides with a curved cross section shall minimize the likelihood of lateral discharge (for example, spiral slides and other slides that change in horizontal direction; slides with a wide, shallow chute; and so forth).		P
8.5.4.7	The internal diameter of tube slides shall be 23 in. (580 mm) or greater.		P

Clause	Requirement + Test	Result - Remark	Verdict
8.5.5	*Exit Region:*		P
8.5.5.1	Slides shall have an exit region length of 11 in. (280 mm) or greater (see Fig. A1.25).		P
8.5.5.2	The slope of the exit region shall be between 0 and -10° as measured from horizontal (see Fig. A1.25).		P
8.5.5.3	For slides with an elevation of no greater than 48 in. (1220 mm), the height of the exit end of the sliding surface shall be no greater than 11 in. (280 mm) above the protective surfacing. For slides with an elevation greater than 48 in. (1220 mm), the height of the exit end of the sliding surface shall be between 7 in. (180 mm) and 15 in. (380 mm) above the protective surfacing (see Fig. A1.26, Note 1).		P
8.5.5.4	The radius of curvature of the sliding surface in the exit region shall be 30 in. (760 mm) or greater (see Fig. A1.25).		P
8.5.5.5	Slide exit edges shall be rounded or curved.		P
8.5.6	*Slide Clearance Zones:*		P
8.5.6.1	A clear area, free of equipment, shall surround the slide chute. This area is defined by Fig. A1.27 (top illustration). Portions of slides containing hoods or other devices to channel the user into a seated position, spiral slides, and tube slides are exempt. The clear area shall extend through the slide exit clearance zone.		P
8.5.6.2	Spiral slides with open chutes shall maintain a clear area, free of equipment, as defined by Fig. A1.27 (bottom illustration). The clear area shall extend through the slide exit clearance zone.		P
8.5.7	The fall height of slides shall be the distance between the slide transition platform and the protective surface below.		P
8.5.8	*Embankment Slides:*		P
8.5.8.1	The bottom of the slide chute on embankment slides shall be no greater than 12 in. (305 mm) above the surrounding ground surface inside the slide clearance zone. See Fig. A1.63.		P
8.5.8.2	The platform, sitting section, or slide entry of an embankment slide shall meet the requirements of 8.5.2.		P
8.5.8.3	Embankment slides shall meet the requirement of 8.5.3 – 8.5.6.		P
8.5.8.4	The fall height of an embankment slide in the slide exit use zone shall be a minimum of 40 in. (1016 mm).		P
8.6	*Swings:*		P
8.6.1	*Placement:*		P
8.6.1.1	Swings shall be located away from other play structures and circulation areas. (Also see 9.4.1.)		P
8.6.1.2	Swings shall not be attached to a composite play structure.		P

Clause	Requirement + Test	Result - Remark	Verdict
8.6.2	*Support Structure*—The support structure shall be designed to discourage climbing and shall have no designated play surfaces.		P
8.6.3	*Hangers*—Hangers shall have bearings, bushings, or other means of reducing the friction and wear of all moving parts and surfaces at the pivot point when moving in the intended direction of travel		P
8.6.4	*Suspended Elements:*		P
8.6.4.1	Suspended elements shall be smoothly finished with blunt or rounded edges and shall conform to 6.2.		P
8.6.4.2	Suspended elements shall not impart a peak acceleration in excess of 100 g and shall have a HIC score not to exceed 500 when tested in accordance with impact attenuation requirements in 8.6.7. *(1)* Materials subject to loss of impact attenuation shall be addressed by the manufacturer per maintenance requirements found in 13.1.		P
8.6.4.3	Any part of a swing which is a minimum of 84 in. (2134 mm) above the protective surface at its lowest point in use is exempt from the impact requirements.		P
8.6.4.4	No more than two suspended elements shall be located within a swing bay. There shall be no limit on the number of bays provided in a single structure.		P
8.6.4.5	Only one multiple occupancy suspended element shall be mounted within a swing bay. Single axis suspended elements intended for a maximum of two users are exempt from this requirement.		P
8.6.5	*Clearances:*		P
8.6.5.1	*Single Axis Swings:*		P
	(1) Unless otherwise specified, when testing for clearances, flexible elements such as belt seats which change shape during use shall be occupied either by the maximum number of designated users or a test device. Applied load shall be 120 lb (55.4 kg) with a seated hip breadth of 13.1 in. (333 mm) per user.		P
	(2) The horizontal distance between adjacent suspension elements at rest shall be no less than 24 in. (610 mm) when measured at 60 in. (1524 mm) above the protective surface (see Fig. A1.28).		P

Clause	Requirement + Test	Result - Remark	Verdict
	(3) The horizontal distance between the supporting structure and the adjacent suspension elements (that is, chain or cable) or suspended elements (that is, seat), whichever is closer, shall be no less than 30 in. (762 mm) when measured at 60 in. (1524 mm) above the protective surface. Swings consisting of only one suspended element (single or multi-user) per structural bay are exempt from this requirement when the lateral movement of the suspended element is limited such that there is no potential to impact the support structure, and a 30 in. (762 mm) minimum clearance is maintained between the suspended element and the support structure when measured 24 in. (607 mm) above the top surface of the suspended element. See Fig. A1.28.		P
	(4) The horizontal distance between the points where single axis swings attach to the hangers shall be greater than the width of the suspended element when occupied either by the minimum user or a test device, both having the following characteristics: 24.4 lb (11.3 kg) with a seated hip breadth of 6.7 in. (170 mm), but shall not be less than 20 in. (508 mm).		P
	(5) The vertical distance between the underside of a suspended element and the protective surface shall be no less than 24 in. (610 mm) for enclosed swing seats, and no less than 12 in. (305 mm) for all other elements.		P
8.6.5.2	*Multi Axis Swings:* *(1) Clearance Zone*—The unobstructed clearance zone required for the suspended element is a cylindrical unobstructed zone centered on the pivot point of the swing with a radius equal to Y + 30 in. (762 mm) whose cylinder length is from the top of the protective surface to the pivot point of the swing with Y as shown in Fig. A1.29. *(2) Underseat Clearance*—The vertical distance between the underside of the suspended element and the protective surface of the use zone shall never be less than 12 in. (305 mm) regardless of occupancy conditions.		N/A
8.6.5.3	*Combination Swings*—Dynamic motion of the suspended element(s) may be influenced by the movement of the frame or other suspended elements (that is, seat), or both. Dynamic motion of the suspended elements must meet the following criteria when in use: *(1) Underseat Clearance*—The vertical distance between the underside of the suspended element and the protective surfacing of the use zone shall never be less than 12 in. (305 mm). *(2) Clearance Zone*—The suspended element shall not come within 30 in. (762 mm) of any support structure or other suspended element through its dynamic range of motion during use.		N/A

Clause	Requirement + Test	Result - Remark	Verdict
8.6.6	The fall height of swings shall be the vertical distance between the pivot point and the protective surface of the use zone.		P
8.6.7	*Suspended Element Impact Attenuation Testing*—This test is intended to be performed by the manufacturer or test laboratory under controlled conditions. Field testing is permitted provided it is performed by qualified personnel and all testing criteria for conditions are met.		P
8.6.7.1	*Principle*—Suspended elements are raised and allowed to swing to strike a test mass. The signal emitted by an accelerometer during each impact is processed to determine the peak value of acceleration and the HIC score.		P
8.6.7.2	*Test Apparatus:* *(1) Test Device*—Components as described below, arranged per Fig. A1.60. *(2) Test Mass*—Test mass shall consist of an aluminum sphere or hemisphere with a diameter of 6.3 6 0.188 in. (160 6 5 mm), mass 10.1 6 0.1 lb (4.6 6 0.05 kg), and surface roughness less than 0.001 in. (25 µm) such that the impacting part between the surface struck and the accelerometer is homogeneous and free from voids. *(3) Accelerometer*—The accelerometer shall be mounted at the centre of gravity of the test mass (8.6.7.2.2) assembly with the sensitive axis aligned to within 2° of the direction of travel of the test mass, capable of measuring acceleration triaxially. *(4) Test Mass Suspension System*—Chains, two 1⁄4 in. (6 mm) gauge, of equal length suspended from pivots 24 in. (610 mm) apart at the approximate height of the bearings of the suspended element (8.6.7.2(*2*)). *(5) Instrumentation*—Specifications for accelerometer, data acquisition and analysis shall be in accordance with Specification F1292-09, 8.3.		P
8.6.7.3	*Procedure:*		P
	(1) Hang the suspended element using standard attachment methods (chai n, cable, etc.) as specified by the manufacturer to produce the most adverse condition in which the product is used. Testing shall be performed at 72 6 5°F.		P
	(2) Arrangement of Test Device—Arrange the test device so that the most adverse leading edge of the suspended element just touches the leading edge of the test mass in its at-rest position.		P

Clause	Requirement + Test	Result - Remark	Verdict
	(3) Raising Suspended Element for Test: *(a)* Raise the suspended element along its arc of travel until the suspension element (that is, chain, etc.) forms an angle of 60° from its at-rest position (see Fig. A1.60). *(b)* When the suspended element is suspended from chains etc., some curvature will be produced in the suspending elements. Adjust the seat position to determine the curvature which provides a stable trajectory. *(c)* Exercise caution to prevent damage to the test equipment. Where there is any possibility of the accelerometer range being exceeded, it is recommended that preliminary tests be made at lower angles (for example, 10°, 20° and 30°). If there is doubt concerning the suspended element trajectory or stability, the test mass or guidance structure, or both, it is recommended that trial releases be made without impacting the test mass. *(d)* Some elements of a flexible nature will require a brace to maintain its configuration during the test procedure. This brace should be mounted between the attachment points and form a dimension of 13.1 in. (333 mm) across at the attachment points. The mass of the brace should not exceed 10 % of the mass of the seat.		P
	(4) Support and Release of the Suspended Element— Support the element in the raised position by a mechanism that provides release without the application of external forces which would disturb the trajectory of the suspended element. Ensure that the seat and suspending elements are motionless. Release the element so that the assembly travels in a smooth downward arc without any visible oscillations or rotations of the element which would prevent it from striking the test mass at the impact point.		P
	(5) Collection of Data—Once satisfactory system operation and calibration are obtained, collect data for 10 impacts. Measure the peak acceleration and HIC for each impact. Time between each impact shall be 1.5 min 6 30 s.		P
	(6) Peak Acceleration and HIC—Record the peak acceleration and HIC as the mean value from the 10 impacts.		P
8.6.7.4	The manufacturer shall designate the maximum height of the pivot point at which the suspended element meets the requirements as specified in 8.6.4.2. Applicable requirements for the suspended elements shall also be included.		P
8.7	*Swinging Gates and Doors*—Swinging gates and doors are not recommended for public playgrounds.		N/A

Clause	Requirement + Test	Result - Remark	Verdict
8.8	*Vertical Rotating Equipment*—Equipment that rotates about an axis which is greater than 45° from horizontal.		N/A
8.8.1	*General Configuration:*		N/A
8.8.1.1	Hand support shall be provided to help children maintain their balance and provide a secure means of hanging on, or the area in which the children sit shall be concave or tub like to contain the user to reduce the likelihood of ejection.		N/A
8.8.1.2	Equipment with a maximum dimension greater than 20 in. (508 mm) measured from the axis of rotation to the outmost perimeter shall have a perimeter that is approximately circular. The difference between the minimum and maximum radii shall not exceed 2 in. (50 mm) (see Fig. A1.31). Any component extending beyond the outer perimeter shall be designed to minimize the likelihood of hazardous impact during use.		N/A
8.8.1.3	Equipment with a maximum dimension less than or equal to 20 in. (508 mm) measured from the axis of rotation to the outmost perimeter may be non-circular in shape.		N/A
8.8.1.4	Equipment designed for climbing shall also meet the requirements in 8.2.		N/A
8.8.1.5	*Platforms Flush to the Protective Surfacing*—There shall be no gap greater than .312 in. (7.9 mm) measured in any direction between the platform and protective surfacing.		N/A
8.8.1.6	*Rigid Platforms Not Flush to the Protective Surfacing*—The underside of the equipment shall be free from abrupt changes that are rigid and hang below the overall thickness of the platform. The clearance between the equipment and the protective surfacing shall be between 2.38 and 3.50 in. (60.5 and 88.9 mm) or greater than 9.0 in. (228.6 mm) unless a protective skirt is provided. When a protective skirt is provided, it shall be smooth and continuous, tapered towards the axis of rotation to a clearance between 2.38 and 3.50 in. (60.5 and 88.9 mm) or greater than 9.0 in. (228.6 mm) at the lowest point.		N/A
8.8.1.7	Equipment with a maximum dimension greater than 20 in. (508 mm) measured from the axis of rotation to the outmost perimeter shall be designed and constructed to minimize the likelihood of hazardous impact by any rigid members, and provide clearance to the protective surfacing material should the user fall or pass through the interior of the equipment during use.		N/A
8.8.1.8	Equipment with a reducing plane of rotation shall maintain a minimum clearance of 9 in. (229 mm). See Fig. A1.61.		N/A

Clause	Requirement + Test	Result - Remark	Verdict
8.8.1.9	Equipment with a maximum dimension less than or equal to 20 in. (508 mm) measured from the axis of rotation to the outmost perimeter are exempt from requirements 8.8.1.6 and 8.8.1.8.		N/A
8.8.1.10	*Clearance Zone*—Rotating equipment shall have a clear area free of rigid structural components of 72 in. (1829 mm) as defined in Fig. A1.62. Rotating equipment shall have a clear area free of rigid and non-rigid components such as but not limited to cables, netting, and belting of 21 in. (533 mm) as defined in Fig. A1.62. Rotating upper body equipment with a maximum dimension less than or equal to 20 in. (508 mm) measured from the axis of rotation to the outermost perimeter is exempt from the clearance zone requirement.		N/A
8.8.2	*Oscillation*—Equipment shall not be provided with an oscillatory (up and down) motion.		N/A
8.8.3	*Speed Limitations*—Equipment requiring speed limitation shall be constructed to limit their maximum speed to one of the following formulas, where *D* equals diameter in feet, and *V* equals peripheral velocity in ft/s.		N/A
8.8.3.1	Velocity, V = 4.012 x √D.		N/A
8.8.3.2	Revolutions per minute, r/min = 76.632/√D.		N/A
8.8.3.3	Equipment with a maximum dimension less than or equal to 20 in. (508 mm) measured from the axis of rotation to the outmost perimeter are exempt from the speed limitation requirements.		N/A
8.8.3.4	Equipment with a maximum dimension greater than 20 in. (508 mm) measured from the axis of rotation to the outermost perimeter which also possess a 108 in. (2743 mm) use zone are exempt from speed limitation requirements (see Fig. A1.33).		N/A
8.8.4	The fall height of vertical rotating equipment shall be the distance between the highest designated play surface and the protective surface below.		N/A
8.9	*Roller Slides:*		P
8.9.1	Roller slides shall meet the specified requirements for slides in 8.5.		P
8.9.2	There shall be no crush, shear, entrapment, entanglement, or catch points between the junctures caused by two or more components.		P
8.9.2.1	A crush, shear, entrapment, or catch point is any point that will admit a 3⁄16 in. (5 mm) diameter neoprene rod at one or more positions, either between rollers or adjacent stationary segments.		P
8.9.3	The neoprene rods shall have a hardness reading between 50 and 60 as determined by a Type A durometer in accordance with Test Method D2240.		P
8.9.4	The fall height of roller slides shall be the distance between the slide transition platform and the protective surface below.		P

Clause	Requirement + Test	Result - Remark	Verdict
8.10	*Seesaws:*		N/A
8.10.1	Fulcrum seesaws (also known as teeter totters) are not recommended for preschool age children unless they are equipped with a spring centering mechanism to minimize abrupt contact with the underlying protective surface should one child choose to dismount.		N/A
8.10.2	Shock-absorbing material, such as automobile tires, should be embedded in the underlying protective surface beneath the ends of fulcrum seesaws, or secured to the underside of each occupant position. As an alternative, seesaws may be equipped with a spring centering mechanism to minimize the risk of injury due to abrupt contact with the protective surface. Such a mechanism shall comply with the general requirements for crush and shear points in 6.5.		N/A
8.10.3	The fulcrum of fulcrum seesaws shall comply with the general requirements for crush and shear points in 6.5.		N/A
8.10.4	Each occupant position shall be provided with handgrip(s) that comply with the general requirements for protrusions (see 6.3).		N/A
8.10.4.1	Handgrip(s) shall not turn, rotate, or twist. Handgrip(s) intended to be gripped by one hand shall have a minimum length of 3.0 in. (76 mm). Handgrip(s) intended to be gripped by two hands shall have a minimum length of 6.0 in. (152 mm). Handgrip(s) shall not protrude beyond the sides of the seat on fulcrum seesaws.		N/A
8.10.5	Fulcrum seesaws shall not be equipped with footrests unless they have a spring centering mechanism to minimize the risk of injury due to abrupt contact with the underlying protective surface.		N/A
8.10.6	Seesaws shall be constructed so that the maximum attainable angle between a line connecting the seats and the horizontal is 25° and the maximum attainable seat height is 60 in. (1524 mm) above the level of the protective surface.		N/A
8.10.7	The fall height of seesaws shall be the distance between the maximum height attainable by any part of the seesaw and the protective surface below.		N/A
8.11	*Spring Rocking Equipment:*		N/A
8.11.1	Seats shall be designed to minimize the likelihood of use by more than the intended number of users.		N/A
8.11.2	Each seating position shall be provided with a handgrip(s) that comply with the general requirements for protrusions (see 6.3) and for hand gripping components (see 7.2.6.4). Handgrips intended to be gripped by one hand shall have a minimum length of 3.0 in. (76 mm). Handgrips intended to be gripped by both hands shall have a minimum length of 6.0 in. (152 mm).		N/A

Clause	Requirement + Test	Result - Remark	Verdict
8.11.3	Footrests shall be provided that have a minimum width of 3.5 in. (89 mm) and shall conform to the general requirements for protrusions (see 6.3)		N/A
8.11.4	Spring mechanisms shall conform to the general requirements for crush and shear points (see 6.5) when the equipment is operated by a maximum user (120 lb) (54 kg).		N/A
8.11.5	After installation, the height of the seat, while unloaded and at rest, shall not be less than 14 in. (360 mm) and not more than 28 in. (710 mm) above the protective surface.		N/A
8.11.6	The fall height of spring/rocking equipment shall be the distance between the maximum height of the seat or designated play surface and the protective surface below.		N/A
8.12	*Horizontal Rotating Equipment (Example Log Rolls)*— Equipment that rotates about an axis which is less than or equal to 45° from horizontal.		N/A
8.12.1	Horizontal rotating equipment intended to be stood upon shall provide hand gripping component(s) to aid in mounting and dismounting, and maintaining balance while in use. Hand gripping components shall be between 0.95 in. (24 mm) and 1.55 in. (39 mm) in diameter.		N/A
8.12.2	Horizontal rotating equipment is not recommended for use by children 2 to 5 years.		N/A
8.12.3	The highest point of the top surface of horizontal equipment intended to be stood upon shall be no greater than 18 in. (460 mm) above the protective surfacing.		N/A
8.12.4	The fall height of horizontal rotating equipment shall be the distance between the highest designated play surface and the protective surface below.		N/A
8.13	*Track Rides:*		N/A
8.13.1	Track rides are not recommended for children less than 5 years of age.		N/A
8.13.2	The lowest portion of the hand gripping component shall be a minimum of 64 in. (1630 mm) above the surfacing. The maximum height of the hand gripping component shall not exceed 78 in. (1980 mm) above the protective surfacing. The hand gripping component shall comply to section 8.3.1.1.		N/A
8.13.3	When elevated platforms are used they shall include a landing space with a minimum length of 36 in. (910 mm) and a minimum width of 32 in. (810 mm). Such landings shall comply with the requirements for the 5 to 12-year-olds found in 8.3.4.		N/A
8.13.4	Track rides should be designed to prevent the structural elements from obstructing the user in the landing area.		N/A
8.13.5	An unobstructed clearance zone shall be maintained throughout the length of travel of the hand gripping component.		N/A

Clause	Requirement + Test	Result - Remark	Verdict
8.13.6	The center to center distance between adjacent tracks should be at least 48 in. (1220 mm).		N/A
8.13.7	When the rolling portions of the hand gripping component are enclosed within the track beam, the track assembly is exempted from the crush and shear requirements.		N/A
8.13.8	The fall height of track ride equipment shall be the distance from the maximum height of the equipment to the protective surface. Equipment support posts with no designated play surfaces are exempt from this requirement.		N/A
8.14	*Roofs:*		P
8.14.1	Roofs that are an integral part of a play structure may be any angle, provided that the roof line (lowest edge), excluding support members, is at least 84 in. (2130 mm) above the underlying designated play surface and the pivot point of a swing. (See Fig. A1.58.)		P
8.14.2	Roofs that are an integral part of a play structure that are less than 84 in. (2130 mm) above the designated play surface shall contain no designated play surfaces.		P
8.14.3	The roof line (lowest edge) shall maintain a clearance of *X* + 42 in. (1065 mm) above the protective surfacing within the use zone of a swing, where *X* is the distance from the pivot point of the swing to the underlying protective surface. (See Fig. A1.58.)		P
8.14.4	Support members shall be designed to discourage climbing and have no designated play surfaces.		P
8.14.5	Roofs do not have a fall height requirement.		P
8.15	*Stepping Forms:*		N/A
8.15.1	Stepping forms shall contain a minimum designated play surface of 10 in. (250 mm) diameter.		N/A
8.15.2	Stepping forms shall have a designated play surface with a slope no greater than 30° from horizontal.		N/A
8.15.3	Stepping forms shall be no greater than 20 in. (508 mm) above the protective surfacing when intended for use by 2 through 5-year-olds and no greater than 30 in. (760 mm) above the protective surfacing when intended for use by 5 through 12-year-olds, unless hand support is provided.		N/A
8.15.4	Stepping form hand supports shall be required at the beginning of the stepping form that is higher than 20 in. (508 mm) when intended for use by 2 through 5-year-olds or 30 in. (760 mm) when intended for use by 5 through 12-year-olds. The hand support height (the vertical distance between the top surface of the stepping form and the top surface of the hand support) shall be between 22 and 38 in. (560 and 970 mm).		N/A

Clause	Requirement + Test	Result - Remark	Verdict
8.15.5	Stepping forms intended for use by 2 through 5-yearolds shall be stationary. Stepping forms greater than 30 in. (760 mm) above the protective surface shall be stationary.		N/A
8.15.6	Stepping forms shall be no greater than 12 in. (300 mm) apart when intended for use by 2 through 5-year-olds and no greater than 18 in. (460 mm) apart when intended for use by 5 through 12-year-olds. This dimension shall be measured edge to edge between the adjacent stepping surfaces. (This measurement will be horizontal when adjacent stepping forms are at the same height and it will be diagonal when adjacent stepping forms are at different heights.)		N/A
8.15.7	The fall height of stepping forms shall be the distance between the highest point of the stepping form and the protective surface below.		N/A
9.	**Playground Layout**		—
9.1	*Play Structure Use Zone:*		P
9.1.1	There shall be a use zone for each play structure which shall consist of obstacle-free surfacing that conforms to Specification F1292 appropriate for the fall height of the equipment. The dimensions and configuration of the use zone shall be dependent upon the type of play equipment, as specified in Section 9. Use zones of certain types of equipment may overlap unless otherwise specified.		P
9.2	*Stationary Playground Equipment*—Stationary play equipment may be freestanding structures, may be in combination with other play equipment, or may be part(s) of a composite play structure (see Fig. A1.32).		P
9.2.1	The use zone for stationary play equipment shall extend no less than 72 in. (1830 mm) from all sides of the play structure. Equipment that is intended for a user to maintain contact with the ground during play has no individual use zone requirements (for example, free standing talk tubes, free standing activity panels, ground level sandboxes). However, section 9.8.1 placement of play structures and equipment, applies.		P
9.2.2	The use zones for two or more stationary play structures that are not physically attached but are play-functionally linked shall be determined as if the separate equipment were parts of a composite play structure (see Fig. A1.44).		P
9.2.2.1	The direct distance between stepping surfaces on two functionally linked play structures shall not be greater than 12 in. (300 mm) for 2 to 5-year-olds and 18 in. (460 mm) for 5 through 12-year-olds. This dimension shall be measured edge to edge between the adjacent stepping surfaces.		P

Clause	Requirement + Test	Result - Remark	Verdict
9.2.3	The use zone of stationary equipment and other equipment may overlap. If the adjacent designated play surfaces of each structure are no more than 30 in. (760 mm) above the protective surface, the minimum distance between the structures shall be 72 in. (1830 mm). If the adjacent designated play surfaces of either structure are greater than 30 in. (760 mm) above the protective surface, the minimum distance between the structures shall be 108 in. (2740 mm) (see Fig. A1.32).		P
9.3	*Rotating Play Equipment* (see Fig. A1.33):		N/A
9.3.1	The use zone for equipment that rotates around a vertical axis with a maximum dimension less than or equal to 20 in. (508 mm) measured from the axis of rotation to the outmost perimeter shall be no less than 72 in. (1829 mm) from the perimeter of the play structure. Overlapping use zones is permissible if the adjacent fall height of each structure is less than or equal to 30 in. (760 mm) above the protective surface. If the adjacent fall height on either structure exceed a height of 30 in. (760 mm), the minimum distance between structures shall be 108 in. (2740 mm) (see Fig. A1.33).		N/A
9.3.2	The use zone for equipment that rotates about a vertical axis with a maximum dimension greater than 20 in. (508 mm) measured from the axis of rotation to the outmost perimeter which do not exceed the speed limitation requirements in 8.8.3 shall be no less than 72 in. (1829 mm) from the perimeter of the play structure and shall not overlap any other use zone (see Fig. A1.33).		N/A
9.3.3	The use zone for equipment that rotates about a vertical axis with a maximum dimension greater than 20 in. (508 mm) measured from the axis of rotation to the outmost perimeter which exceed the speed limitation requirements in 8.8.3 shall be no less than 108 in. (2743 mm) from the perimeter of the play structure including a 72 in. (1829 mm) use zone that shall not overlap the use zone of other play structures (see Fig. A1.33).		N/A
9.3.4	Single user equipment, such as sand diggers, which require the user to maintain contact with the ground during play, have no individual use zone requirements. However, 9.8.1 applies.		N/A
9.3.5	The use zone for equipment that rotates around a horizontal axis and has a designated play surface greater than 30 in. (760 mm) above the protective surface shall be no less than 72 in. (1829 mm) from the perimeter of the play structure. The use zone for equipment that rotates around a horizontal axis and has a fall height of 30 in. (760 mm) or less above the protective surface, such as a log roll, shall be considered stationary play equipment.		N/A

Clause	Requirement + Test	Result - Remark	Verdict
9.3.6	No other play structure use zone shall overlap the use zone of equipment that rotates around a horizontal axis and has a fall height greater than 30 in. (760 mm) above the protective surface.		N/A
9.4	*Swings:*		P
9.4.1	*To-Fro Swings:*		P
9.4.1.1	The use zone to the front and to the rear of to-fro swings shall be a minimum distance of 2X on a line extending 90° both front and rear from the longitudinal direction of the suspending beam, where X equals the vertical distance from the top of the protective surfacing to the pivot point of the swing. The total horizontal distance from the front to the rear of the use zone shall be not less than 4X. (See Fig. A1.34 and Fig. A1.35.)		P
9.4.1.2	For swings with fully enclosed swing seats, the use zone to the front and to the rear of the swing shall be a minimum distance of 2W on a line continuous both front and back 90° from the longitudinal direction of the suspending beam where W equals the vertical distance from the top of the occupant's sitting surface to the pivot point on the swing. The total horizontal distance from the front to the rear of the use zone should not be less than 4W (see Fig. A1.36 and Fig. A1.37).		P
9.4.1.3	No other play structure use zone shall overlap the front-to-rear use zone of a to-fro swing (see Figs. A1.34- A1.37).		P
9.4.1.4	The use zone width for to-fro swings shall be at least as wide as a distance measured from 30 in. (760 mm) on either side of the outer suspending rope, chain, or cable measured at 60 in. (1524 mm) above the protective surface (see Figs. A1.34-A1.37).		P
9.4.1.5	The use zone surrounding the support structure of to-fro swings shall extend no less than 72 in. (1830 mm) in all directions from the structure (see Figs. A1.34-A1.37). *(1)* The support structure use zones for adjacent to-fro swings may overlap (see Figs. A1.34-A1.37). *(2)* The use zone for a support structure of to-fro swings and the use zone of other play equipment may overlap. The minimum distance between the structures shall be 108 in. (2740 mm).		P
9.4.2	*Rotating Swings* (see Fig. A1.38):		N/A
9.4.2.1	The use zone for a rotating swing shall be a minimum horizontal distance of Y + 72 in. (1830 mm) in all directions from pivot point of the swing, where Y equals the vertical distance between the pivot point and the top of the swing seat or suspended member.		N/A
9.4.2.2	No other play structure use zone shall overlap the use zone of a rotating swing.		N/A

Clause	Requirement + Test	Result - Remark	Verdict
9.4.2.3	The use zone surrounding the support structure of rotating swings shall extend no less than 72 in. (1830 mm) in all directions from the support structure.		N/A
9.4.2.4	The support structure use zones of separate adjacent rotating swings may overlap (see Fig. A1.38), however, swing bay clearance zones (Y + 30 in. (760 mm)) shall not overlap.		N/A
9.4.2.5	The use zone for a support structure for rotating swings and the use zone of other equipment may overlap. The minimum distance between structures shall be 108 in. (2740 mm).		N/A
9.4.3	*Combination Swings*—The boundary of the use zone for combination swings shall be composed of the individual use zones as defined in 9.4.1 or 9.4.2, or both, for the individual suspended elements. See Fig. A1.59.		N/A
9.5	*Rocking/Springing Play Equipment* (see Fig. A1.39):		N/A
9.5.1	*Rocking/Springing Play Equipment Intended for Sitting:*		N/A
9.5.1.1	The use zone for rocking/springing equipment upon which the user is intended to sit shall be no less than 72 in. (1830 mm) in all directions from the at-rest perimeter of the play structure.		N/A
9.5.1.2	The use zones of adjacent rocking/springing equipment intended for sitting may overlap when each structure consists of a seat or designated play surface with a height 30 in. (760 mm) or less above the protective use zone surfacing when unoccupied.		N/A
9.5.1.3	The use zone for rocking/spring equipment and the use zone of other structures may overlap unless otherwise noted in Section 9. The minimum distance between the outermost edge of the spring/rocking equipment when unoccupied and the outermost edge of the other structure/equipment shall be 72 in. (1830 mm) if both pieces of equipment/structure have designated play surfaces 30 in. (760 mm) or less above the protective surfacing and 108 in. (2740 mm) if either of the pieces of equipment/structure have a designated play surface greater than 30 in. (760 mm) above the protective surface.		N/A
9.5.2	*Rocking/Springing Play Equipment Intended for Standing* (see Fig. A1.39):		N/A
9.5.2.1	The use zone for rocking/springing equipment upon which the user is intended to stand shall be no less than 84 in. (2130 mm) in all directions from the at rest perimeter of the play structure.		N/A
9.5.2.2	No other play structure use zone shall overlap the use zone of a rocking/springing structure upon which the user is intended to stand.		N/A
9.5.2.3	Equipment with limited movement or equipment on which a user cannot develop enough force to launch or propel themselves away from the equipment are exempt from these requirements.		N/A

Clause	Requirement + Test	Result - Remark	Verdict
9.6	*Slides* (see Fig. A1.40):		P
9.6.1	The use zone around the steps or ladder, platform, and chute or slide bed of straight, wavy, and spiral slides shall conform to the use zone standard for stationary play equipment.		P
9.6.2	The use zone at the lower exit end of the chute or slide bed shall be a minimum of X where X equals the vertical distance from the protective surfacing at the lower exit to the highest point of the sliding surface.		P
9.6.2.1	The use zone at the lower exit end of the chute or slide bed shall extend in the direction of the descent a horizontal distance not less than 72 in. (1830 mm) but need not be greater than 96 in. (2440 mm) from the lower exit.		P
9.6.3	*Slide Exit Clearance Zone*—A clear zone, free of equipment, shall extend from the end of the slide to the perimeter of the slide use zone. This area shall have a width as shown in Fig. A1.41, Fig. A1.42, and Fig. A1.43. Slide exit clearance zones for two or more slides may overlap if their sliding paths are parallel as shown in Fig. A1.41 and Fig. A1.42. Merging slides with converging paths of travel shall not have overlapping clearance zones as shown in Fig. A1.43. Exemption: the slide itself may encroach into slide exit clearance zone (for example, spiral slides).		P
9.6.4	*Embankment Slides:*		P
9.6.4.1	On an embankment slide, the transition area and the slide chute up to the beginning of the exit region has no individual use zone or fall height requirements.		P
9.6.4.2	Platforms that are no greater than 12 in. (305 mm) above the underlying surface that are used to access embankment slides have no individual use zone or fall height requirements.		P
9.6.4.3	The embankment slide shall exit onto a protective surfacing zone that is not part of the embankment.		P
9.6.4.4	The use zone at the lower exit end of the chute shall meet the requirements of 9.6.2 and the slide exit clearance zone of 9.6.3. See Fig. A1.63.		P
9.7	*Composite Play Structures* (see Fig. A1.44):		P
9.7.1	The boundary of the use zone for a composite play structure shall be composed of those use zones that have been established for each individual play structure that, when joined together, comprise the composite play structure.		P

Clause	Requirement + Test	Result - Remark	Verdict
9.7.2	It is impractical to identify and establish assembled use zone standards for all possible configurations of a composite play structure. Therefore, the professional judgment of play equipment manufacturers, designers, and owner/operators shall be used when designing a modular composite play structure to eliminate hazards created by conflicts in circulation use patterns or close proximity of adjacent components, or both.		P
9.8	*Placement of Play Structures and Equipment* (see Fig. A1.45):		P
9.8.1	Sufficient space shall be provided between all adjacent structures and individual play equipment for the purposes of play and circulation.		P
9.8.2	In settings where periodic overcrowding is likely, a supplemental circulation area beyond the use zone is recommended. Provision of such a supplemental circulation area shall be contingent upon the professional judgment of the playground designer or owner/operator.		P
9.8.3	Moving play equipment such as swings and rotating equipment shall be located in a position away from circulation routes and near the periphery of the playground.		P
9.8.4	*Overhead Obstructions:*		N/A
9.8.4.1	Overhead obstructions within the use zones of playground equipment that are not part of the play structure (for example, tree limbs) shall not be within 84 in. (2130 mm) of each designated play surface, the use zone, or above the pivot point of swings, or within *X* + 42 in. (1065 mm) above the protective surface within the use zone of a swing, where *X* is the distance from the pivot point of the swing to the underlying protective surface. (See Fig. A1.58.)		N/A
9.8.4.2	All overhead utility line clearances above the use zone areas shall comply with all local, state, and national codes, such as the National Electrical Safety Code.		N/A
9.9	*Track Rides:*		N/A
9.9.1	The use zone of a track ride shall extend no less than 72 in. (1830 mm) in all directions from the equipment.		N/A
10.	**Accessibility**		—
10.1	Playgrounds shall comply with the DOJ 2010 Standard for Accessible Design where applicable.		P
11.	**Installation**		—
11.1	*Designer's or Manufacturer's Responsibilities:*		P
11.1.1	The designer or manufacturer shall provide clear and concise instructions and procedures for the installation of each play structure designed or provided, as well as a complete parts list.		P

Clause	Requirement + Test	Result - Remark	Verdict
11.2	*Owner's/Operator's Responsibilities:*		P
11.2.1	The owner/operator shall follow the designer's or manufacturer's instructions and procedures to install all play structures provided.		P
11.2.2	The owner/operator shall install protective surfacing within the use zone of each play structure in accordance with Specification F1292 appropriate for the fall height of each structure and Specification F1951 where applicable.		P
12.	**Structural Integrity**		—
12.1	The structural integrity tests are intended to be conducted by manufacturers on equipment at a test site and are not intended to be performed on equipment installed on the playground or as part of a routine maintenance program. This section is based on the use of performance tests for structural integrity. Performance tests require a definite end point (that can be physically measured) and that the safety factors be included in the loading criteria.		P
12.2	*Loading Test Criteria:*		P
12.2.1	The test load shall be applied through appropriate load distribution devices. The load distribution device (loading device) shall be either a loading block(s) or a strap(s) having the dimensions shown in Fig. A1.51.		P
12.2.2	After conducting the tests in 12.3.1 – 12.5.2 there shall be no visible crack or breakage of any component and no form of permanent deformation of any component that may adversely affect the structural integrity or safe use of the equipment. After removal of the load, hooks, shackles, rings, or links shall not have opened to more than 0.04 in. (1.0 mm).		P
12.3	*Strength of Swing Components and Structures:*		P
12.3.1	Swing assemblies (swing seats, connectors, suspending members, and bearing/hanger assembly) shall be installed in accordance with the manufacturer's installation instructions or supported in an equivalent manner		P
12.3.1.1	For swing assemblies intended for single occupancy, a load-distribution device shall be centered on the seat and a vertical downward force of 750 lbf (3336 N) shall be applied. The force shall be applied gradually, attaining but not exceeding 750 lbf and then maintained for 5 min.		P

Clause	Requirement + Test	Result - Remark	Verdict
12.3.1.2	For swing assemblies intended for multiple occupancy, a load distribution device shall be centered on each sitting position. A vertical downward force of 605 lbf (2691 N) shall be applied to each loading device simultaneously. The force shall be applied gradually, attaining but not exceeding 605 lbf per device and then maintained for 5 min.		P
12.3.1.3	For swing supporting structures, simultaneously apply at each swing location a vertical downward force of 750 lbf (3336 N) for single-occupancy swings or 605 lbf (2691 N) times the number of intended users for multiple-occupancy swings. Apply the force gradually at locations representing the swing in its “at rest” position. The manufacturer of the multiple-occupancy swing shall specify the number of intended users.		P
12.4	*Components and Structures Subjected to Vertical Loads:*		P
12.4.1	For components having designated play surfaces, determine the number of simultaneous users, n, of a component or structure as specified in this section. Individual components of a structure shall be tested as longitudinal components in accordance with 12.4.1.1. In addition, the structure containing those longitudinal components shall be tested in accordance with 12.4.1.2. Other structures are tested in accordance with the appropriate remaining sections of 12.4. If n is not a whole number, round to the nearest whole number. Place n load distribution devices on the component or structure in a manner that simulates the anticipated load distribution. Simultaneously load each load distribution device with a downward vertical force, F, given by the following equation: $F(\mathrm{N}) = 1113(n+1)/n$ The force shall be applied gradually and then maintained for a period of 5 min.		P
12.4.1.1	*Individual Longitudinal Components*—(These would include a ladder rung, turning/chinning bars, and so forth.) Measure the length of the component, L, in inches (centimetres) and determine the number of users n from the following table. (Round to the nearest whole number.) After the number of users has been determined, apply this number to the equation given in 12.4.1. After the load for each loading device has been calculated by the equation, multiply the load by the number of users to obtain the anticipated load.		P

Clause	Requirement + Test	Result - Remark	Verdict
12.4.1.2	*Structures Containing Two or More Longitudinal Components*—(These would include horizontal ladders, vertical ladders, overhead climbers, and upper-body components.) Count the number of longitudinal components, LC, and determine the number of users, n, from the following table. (Round to the nearest whole number.) After the number of users has been determined, apply this number to the equation given in 12.4.1. After the load for each loading device has been calculated by the equation, multiply the load by the number of users to obtain the anticipated load.		P
12.4.1.3	*Individual Surfaces*—Compute the surface area, A, in square feet (square metres) and determine the number of users, n, from the following table. (Round to the nearest whole number.) After the number of users has been determined, apply the number to the equation given in 12.4.1. After the load for each loading device has been calculated by the equation, multiply the load by the number of users to obtain the anticipated load.		P
12.4.1.4	*Slide Beds*—Determine the number of users, n, as follows: n = L⁄36, where L equals the length of the slide bed in inches (see Fig. A1.26, Note 2), or n = L ⁄910, where L equals the length of the slide bed in millimetres. (Round to the nearest whole number.) Place n load distribution devices equally spaced on the slide bed. Load each distribution device with a downward vertical force given by the equation in 12.4.1. The force shall be applied gradually and then maintained for a period of 5 min. After the load for each loading device has been calculated by the equation, multiply the load by the number of users to obtain anticipated load.		P
12.4.1.5	*Components with Designated Occupancy*—The number of users, n, is equal to the number of designated occupants. After the number of users has been determined, apply the number to the equation given in 12.4.1. After the load for each loading device has been calculated by the equation, multiply the load by the number of users to obtain anticipated load.		P
12.4.1.6 *2*	*-Dimensional Grid Nets*—Determine the number of users, n, as follows: *(1)* Where the inclination of the net is ≤60° from horizontal: *(2)* *(2)* Where the inclination of the net is >60° from horizontal:		P
12.4.1.7 *3*	*-Dimensional Matrix Nets*—Determine the number of users, n, as follows: *(1)* Where volume, (V), is defined by the periphery of the net measured in ft^3 *(2)* Where volume, (V), is defined by the periphery of the net measured in m^3:		P

Clause	Requirement + Test	Result - Remark	Verdict
12.5	*Components Subjected to Lateral Loads*—Components subjected to lateral loads such as guardrails, protective barriers, handrails, and so forth should be subjected to two separate load tests. The force shall be applied gradually and then maintained for a period of 5 min.		P
12.5.1	*Accidental Concentrated Load Test*—Place a load distribution device on the component at any point to produce the most adverse effect. Apply a 460-lbf (2046-N) horizontal force to the load distribution device in a direction perpendicular to the length of the component away from the enclosed structure.		P
12.5.2	*Surge Distributed Load Test*—Apply a horizontal force, F, in a direction perpendicular to the length of the component and away from the enclosed structure. Apply the force near the top of the component and evenly distribute over the entire length of the component. The test force is given as follows: $F(\mathrm{N}) = 21.9L$		P
12.5.3	*Exemptions to 12.5*—Components intended for users standing at grade, such as sandboxes, play panels, sand diggers, etc.		P
12.6	*Alternatives to Testing for Structural Integrity:*		P
12.6.1	Instead of the tests in 12.3.1 – 12.5.2, it is acceptable that a licensed architect or a licensed professional engineer certify the integrity of the equipment if it were to be subjected to the aforementioned test loads (see 12.3.1 – 12.5.2).		P
13.	**Maintenance**		—
13.1	*Public Use Playground Equipment*—The designer or manufacturer of each play structure shall provide to the owner/operator clear and concise inspection, maintenance, and repair instructions, including, but not limited to, what, when, and how to inspect, maintain, and repair.		P
13.1.1	The owner/operator shall maintain and repair each play structure within the playground in accordance with designer/manufacturer's installation and maintenance instructions and in compliance with Specification F1487, and where applicable, addresses the intent of the DOJ 2010 Standard for Accessible Design.		P
13.1.2	The owner/operator shall make periodic inspections of each play structure and remove extraneous materials that could cause injury, infection, or disease.		P
13.2	*Impact Attenuating Surfacing:*		P

Clause	Requirement + Test	Result - Remark	Verdict
13.2.1	The owner/operator shall maintain and repair the impact attenuating surfacing within the use zone of each play structure in accordance with designer/manufacturer's installation and maintenance instructions and in compliance with Specifications F1487 and F1292 appropriate for the fall height of each play structure and, where applicable, maintains the surfacing to address the intent of the DOJ 2010 Standard for Accessible Design.		P
13.2.2	The owner/operator shall make periodic inspections of the impact attenuating surfacing within the use zone of each play structure and remove extraneous materials that could cause injury, infection, or disease.		P
13.3	*Records*—The owner/operator shall establish and maintain detailed installation, assembly, inspection, maintenance, and repair records for each public-use playground equipment area.		P
14.	**Signs or Labels, or Both**		—
14.1	Posting of signs and/or labels shall be the responsibility of the owner/operator of the play equipment. The information regarding the intended ages of users shall be provided by the manufacturer, designer, or consultant.		P
14.1.1	Signs or labels, or both, shall be placed so they:		P
14.1.1.1	Are readily visible to the intended viewer, and		P
14.1.1.2	Alert the viewer to the potential hazard in time to take appropriate action.		P
14.1.2	Signs or labels, or both, shall be placed on the equipment or be freestanding.		P
14.1.3	Freestanding signs or labels, or both, when used, shall be located outside of the equipment use zone and meet the requirements of 9.1.		P
14.2	Information communicated on the sign or label, or both, shall address but not be limited to the following messages:		P
14.2.1	Information message communicating age appropriateness.		P
14.2.2	Information message communicating supervision recommendation.		P
14.2.3	Warning message communicating the removal of helmets, drawstrings or accessories around the neck.		P
14.2.4	Warning message communicating hot play surfaces and/or surfacing, when applicable.		N/A
14.2.5	Warning message communicating the hazard of play equipment located over hard surfaces, when applicable.		N/A
14.3	*Specifications for Signs or Labels, or Both:*		P

Clause	Requirement + Test	Result - Remark	Verdict
14.3.1	Specification for all warning signs or labels, or both, should conform to ANSI Z535.1 and either ANSI Z535.2 or ANSI Z535.4 in the following areas: legibility, type of lettering, clarity of message and symbol, color specifications, and word message and visibility.		P
14.3.2	*Durability for the Labels or Signs*—The labels or signs should conform to UL 969.		P
14.3.3	It is the responsibility of the owner/operator to replace signs or labels, or both, should they become illegible, destroyed, or removed.		P
15.	**Manufacturer Identification**		—
15.1	All play structures and composite play structures shall be required to have the manufacturer's identification.		P
15.2	The manufacturer's identification shall appear, shall be durable, and shall be placed on the play structure, if it stands alone, or on a composite play structure. Custom and community-built equipment shall also carry the identification of the designer.		P
16.	**Keywords**		—
16.1	consumer safety; playground equipment; public use		P
ANNEX	**(Mandatory Information)**		—
A1.	**Figures**		P
	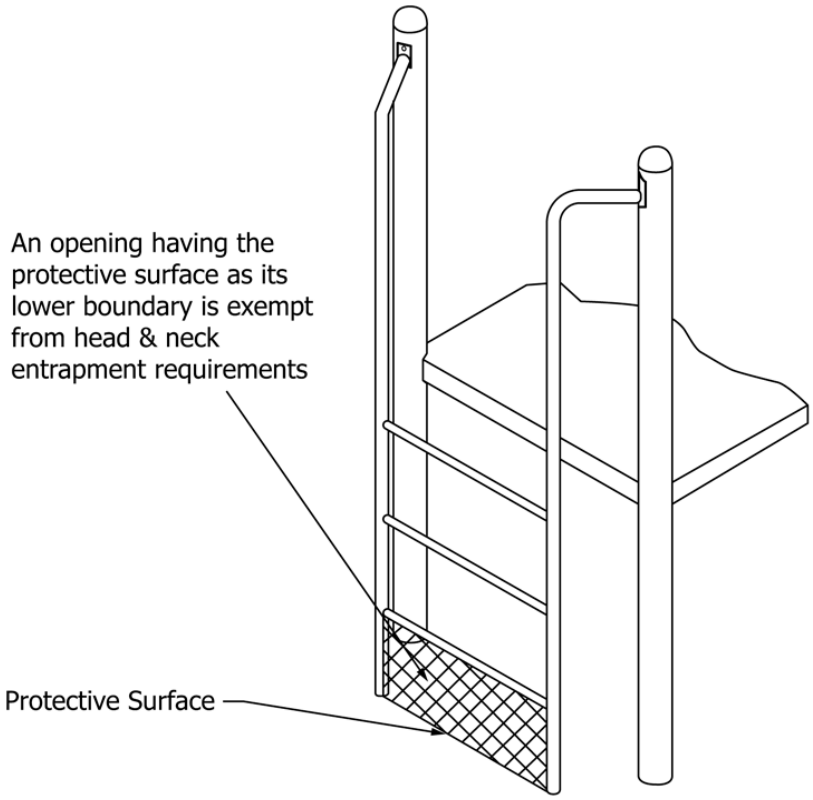 **FIG. A1.1 Exemption from Head and Neck Entrapment Requirements Reference Paragraph 6.1**		P

Clause	Requirement + Test	Result - Remark	Verdict
	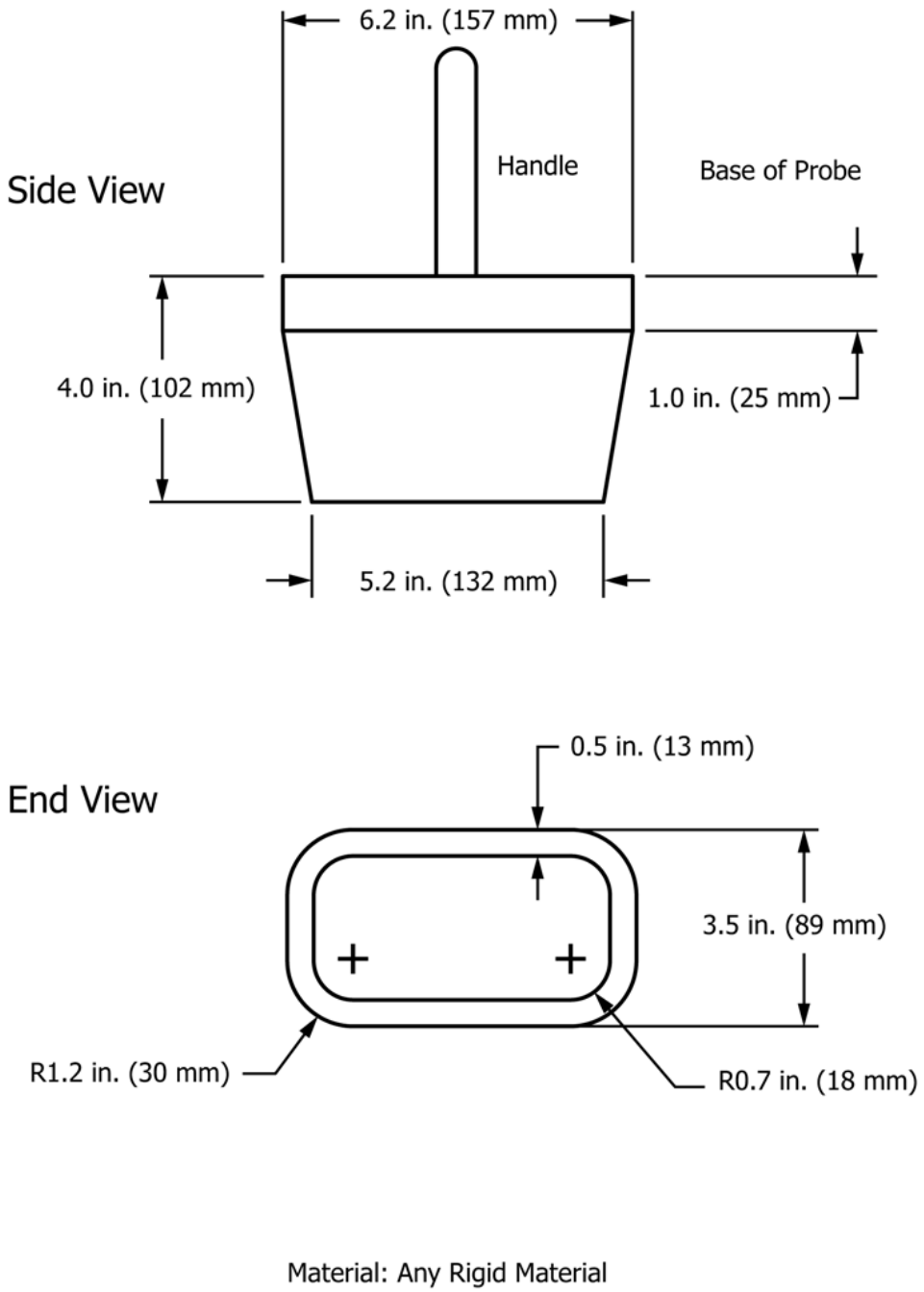 **FIG. A1.2 Torso Probe Reference Paragraphs 6.1.1, 6.1.1.1, and 6.1.2**		P

Clause	Requirement + Test	Result - Remark	Verdict
	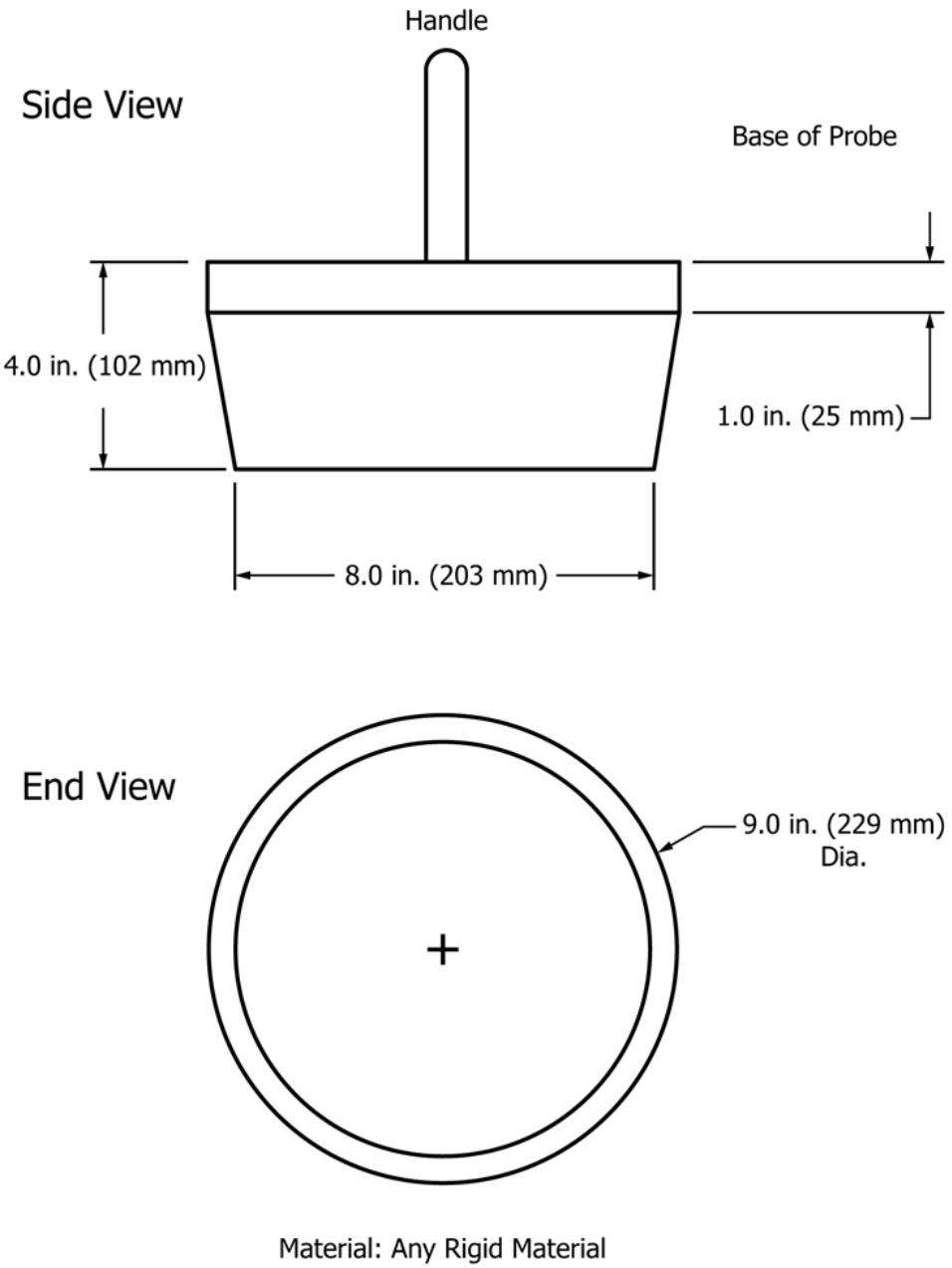 **FIG. A1.3 Head Probe Reference Paragraphs 6.1.1.1 and 6.1.2**		P

Clause	Requirement + Test	Result - Remark	Verdict
	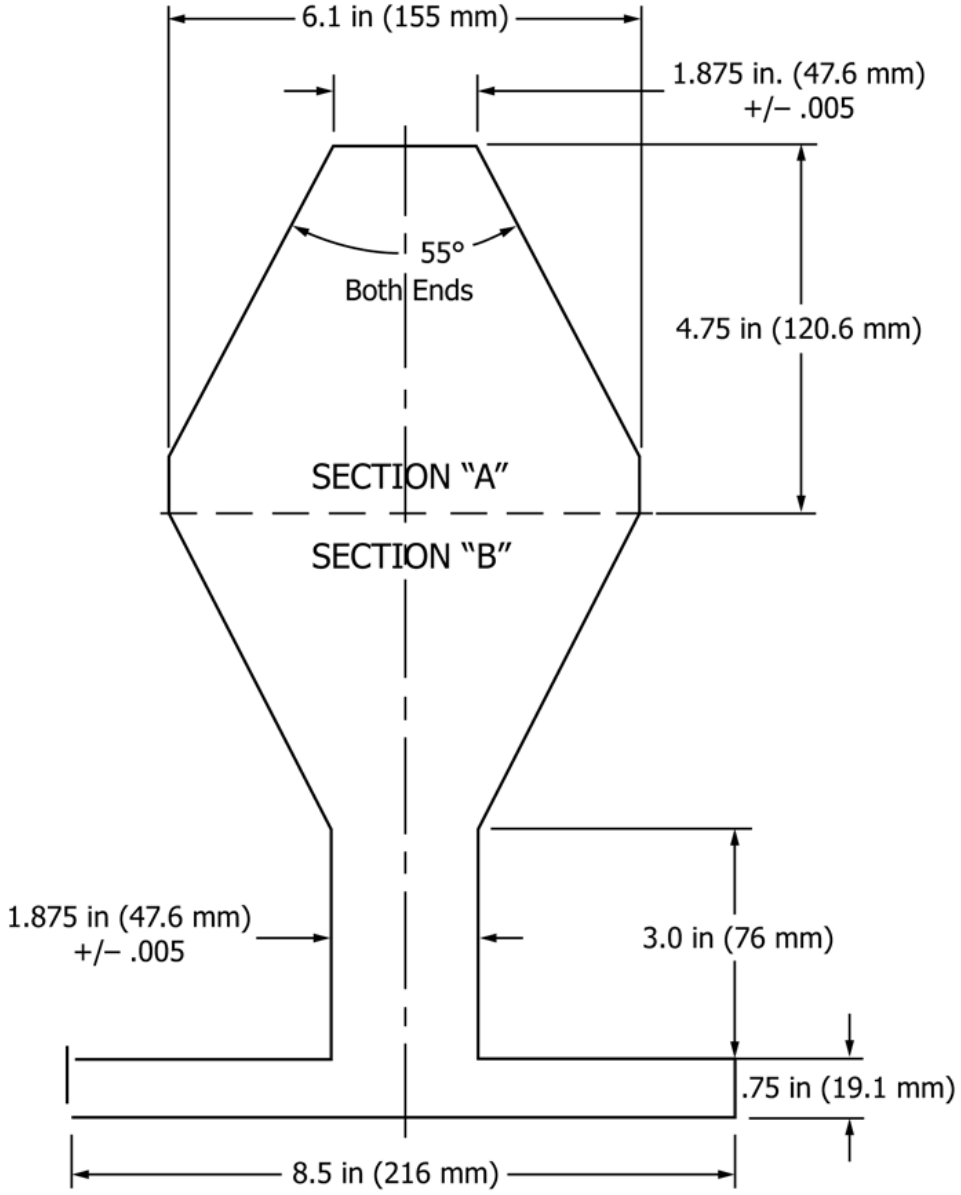 Note: Template to be constructed of any rigid material 0.75 in (19.1 mm) thick. **FIG. A1.4 Test Template for Partially Bounded Openings Reference Paragraph 6.1.4.3**		P

Clause	Requirement + Test	Result - Remark	Verdict
	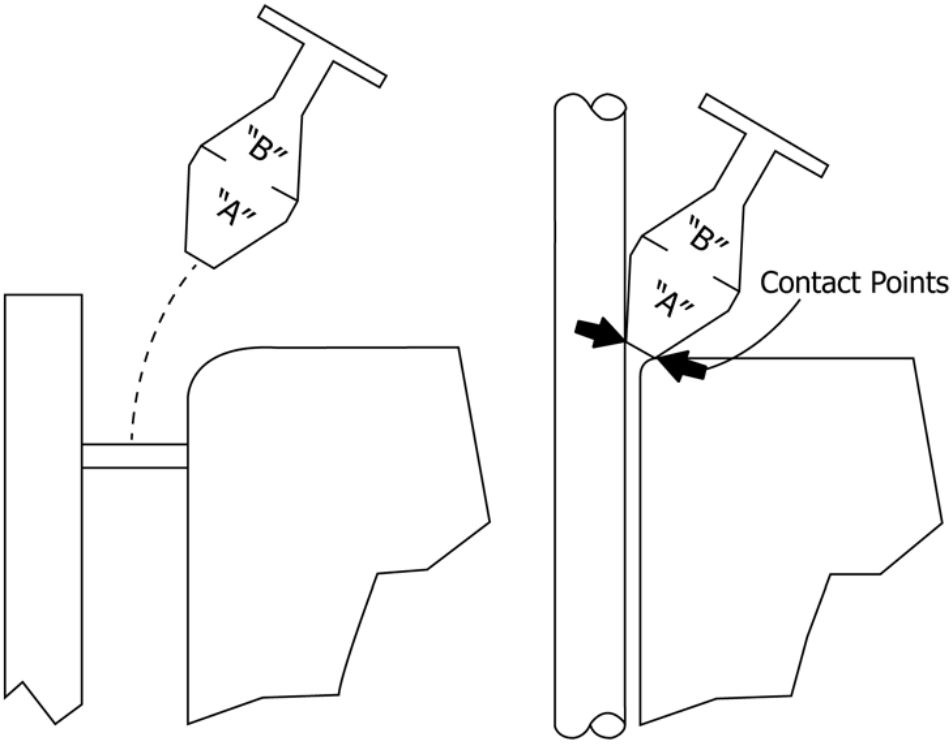 Inserting the 'A' portion of the test template into the opening following the centerline of the opening. Upon inserting the 'A' portion of the test template into the opening, and if there is simultaneous contact between the two corners of the 'A' portion of the test template and the sides making up the boundary of the opening, the opening is considered to PASS the test. **FIG. A1.5 Inserting the Template into the Opening Reference Paragraph 6.1.4.3**		P

Clause	Requirement + Test	Result - Remark	Verdict
	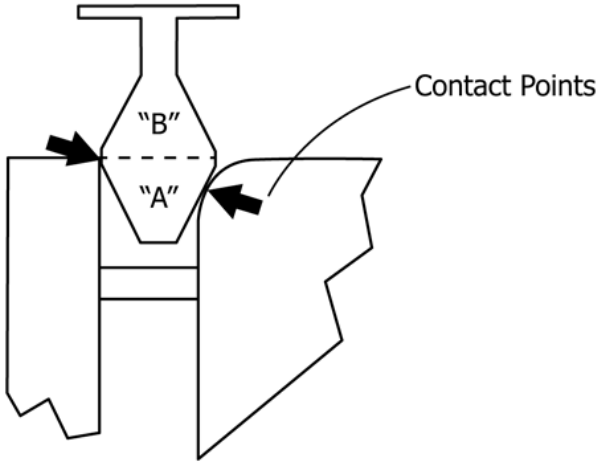 Fail - There is simultaneous contact between the two sides of the 'A' portion of the template and the sides making up the boundary of the opening. The opening should be tested further using the 'B' portion of the template. 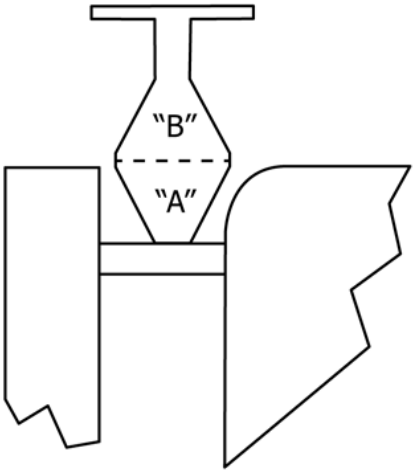 Pass - The bottom of the 'A' template is resting on the lower boundary of the opening and there is not simultaneous contact between the two sides of the template and the sides making up the boundary of the opening. Part 'B' test is not required. **FIG. A1.6 Test Template for Partially Bounded Openings Reference Paragraph 6.1.4.3**		P

Clause	Requirement + Test	Result - Remark	Verdict
	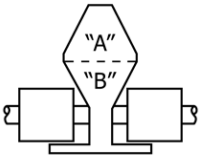 Fail - The size of the components forming the opening allows the 'B' portion of the template to pass into the opening to depth greater than 0.75 in (19.1 mm). 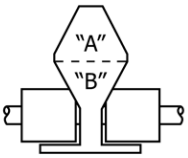 Pass - The size of the components forming the opening does not allow the 'B' portion of the template to fit within the boundaries of the opening. **FIG. A1.7 Exemption for a Thick Surface Condition Using the "B" Portion of the Test Template Reference Paragraph 6.1.4.4**		P
	Step 1 A1.8a Step 2 A1.8b 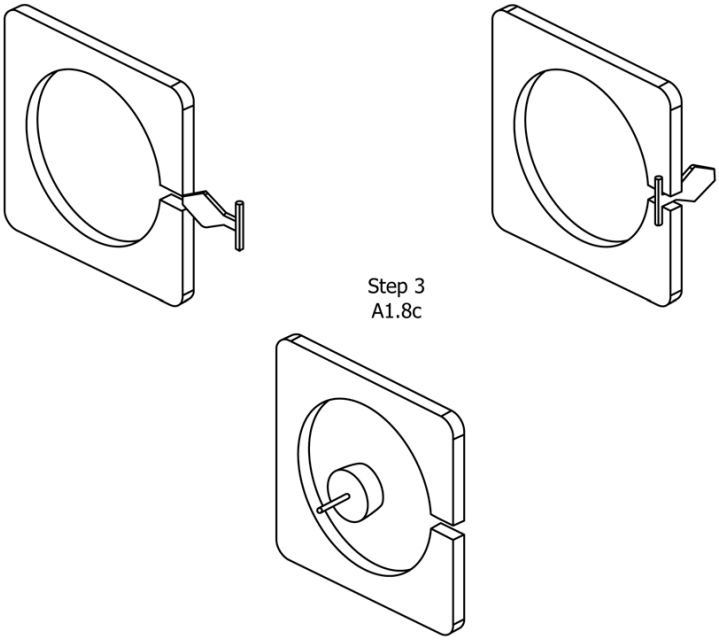 **FIG. A1.8 Template Test Reference Paragraph 6.1.4.4**		P
	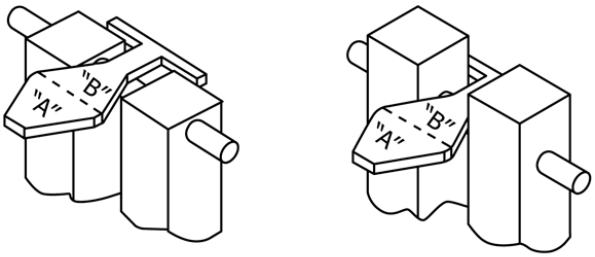 Pass - Depth of opening is less than 0.75 in (19.1 mm). Fail - Depth of opening is greater than 0.75 in (19.1 mm) and is considered accessible. **FIG. A1.9 A Partially Bounded Opening Is Not Considered Accessible if the Template Cannot Penetrate the Opening to a Depth Greater than 0.75 in. (19.1 mm) (Thickness of the Test Template) Reference Paragraph 6.1.4.4**		P

Clause	Requirement + Test	Result - Remark	Verdict
	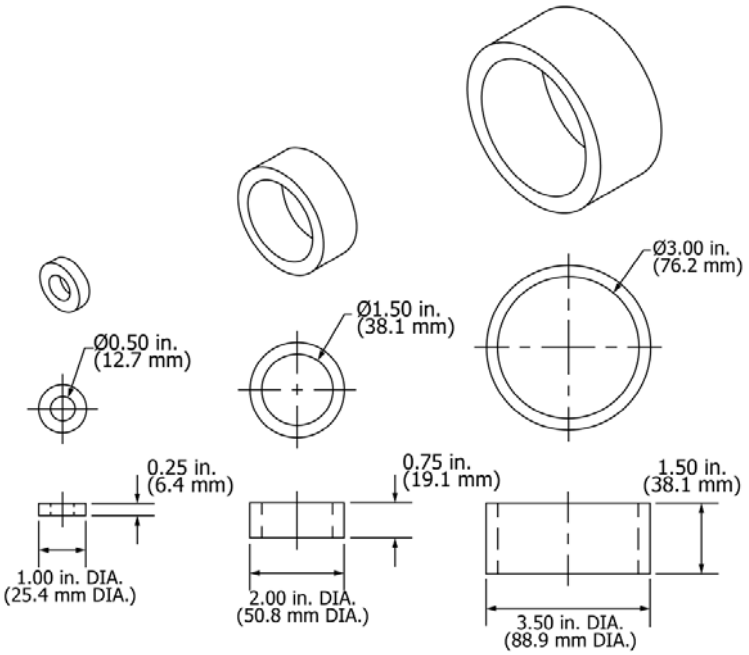 **FIG. A1.10 Projection Test Gauges** **Reference Paragraphs 6.3, 6.3.2, 6.4.1.1(1), 6.4.3, and 6.4.4**		P
	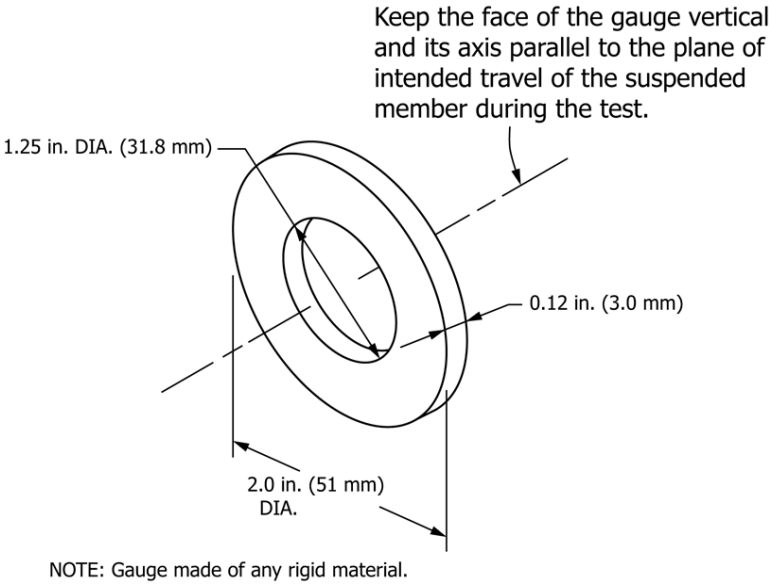 NOTE: Gauge made of any rigid material. **FIG. A1.11 Projection Test Gauge for Suspended Swing Assemblies Reference Paragraphs 6.3, 6.3.3, and 6.4.1.1(2)**		P
	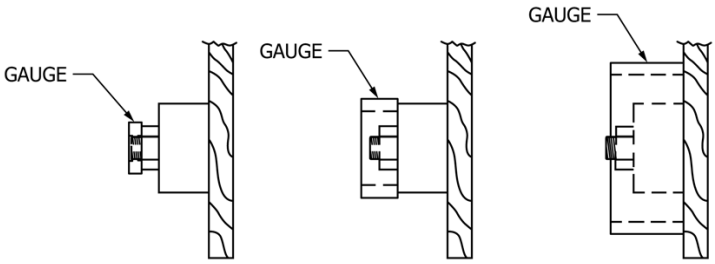 **FIG. A1.12 Compound Projection Test Reference Paragraph 6.3.2**		P

Clause	Requirement + Test	Result - Remark	Verdict
	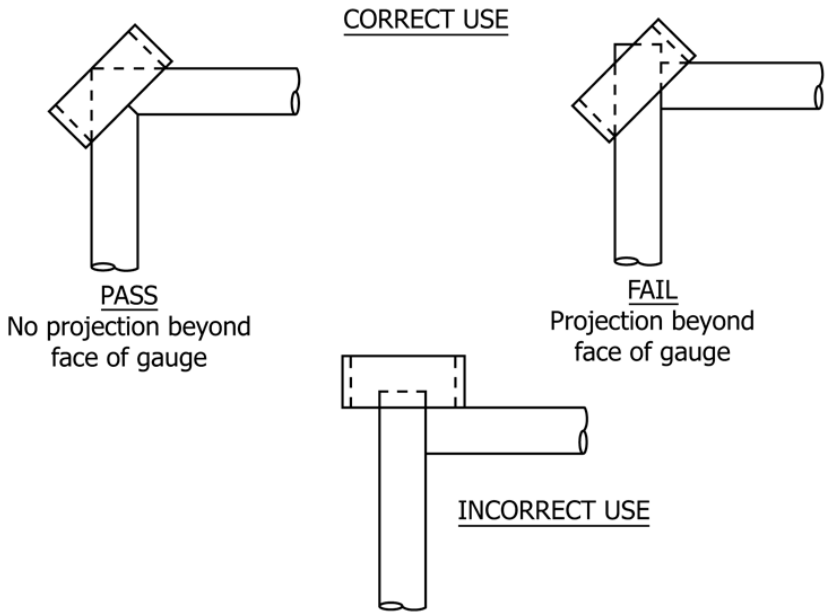 **FIG. A1.13 Use of Projection Gauges Reference Paragraph 6.3.2**		P
	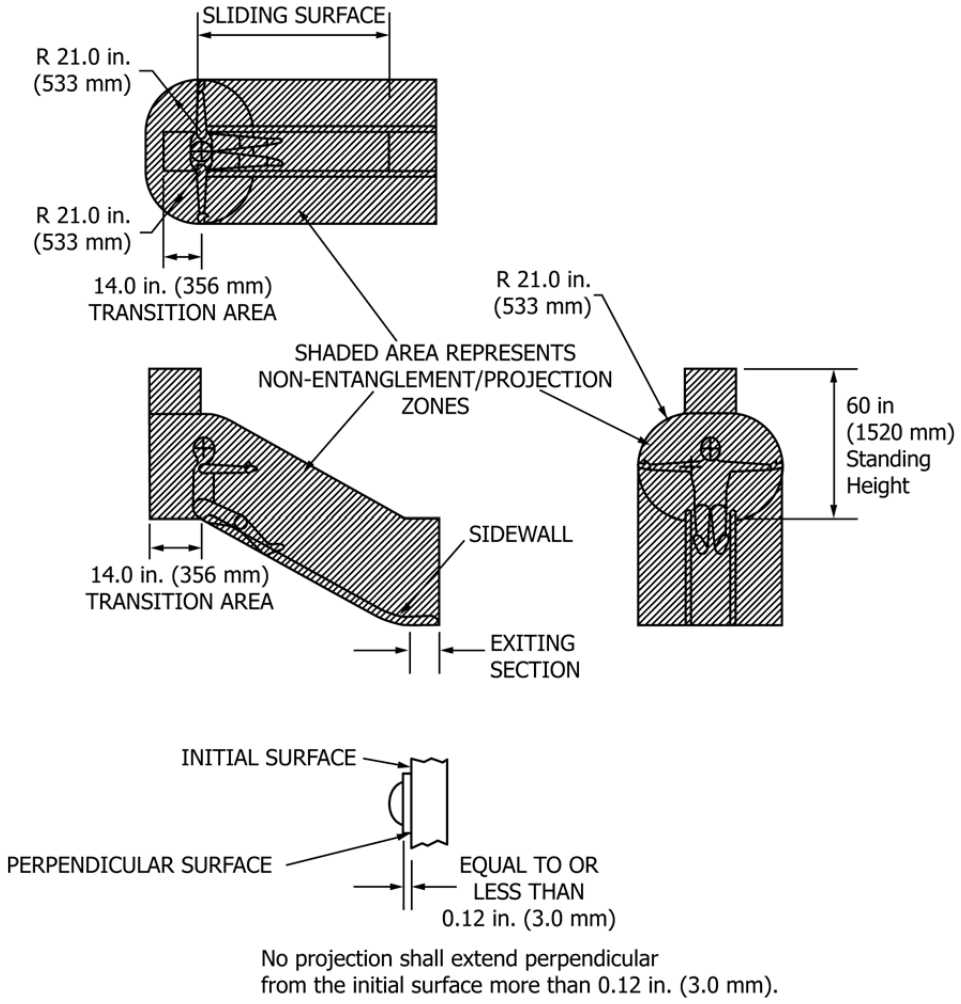 **FIG. A1.14 Area Subject to the Requirements of 6.4.1 Reference Paragraph 6.4.1**		P

Clause	Requirement + Test	Result - Remark	Verdict
	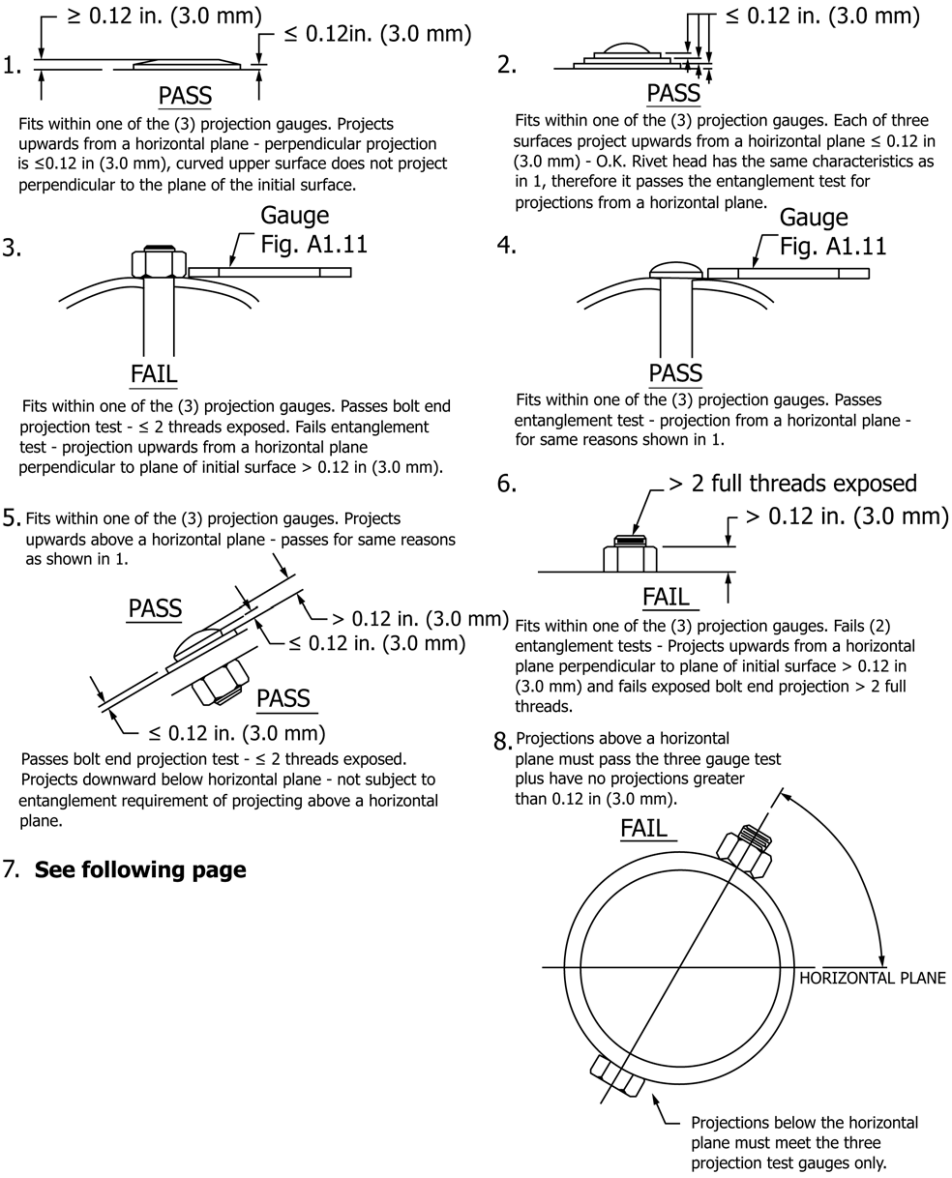		P

FIG. A1.15 Entanglement Test Requirement Examples Reference Paragraphs 6.4.1, 6.4.2, and 6.4.3

Clause	Requirement + Test	Result - Remark	Verdict
	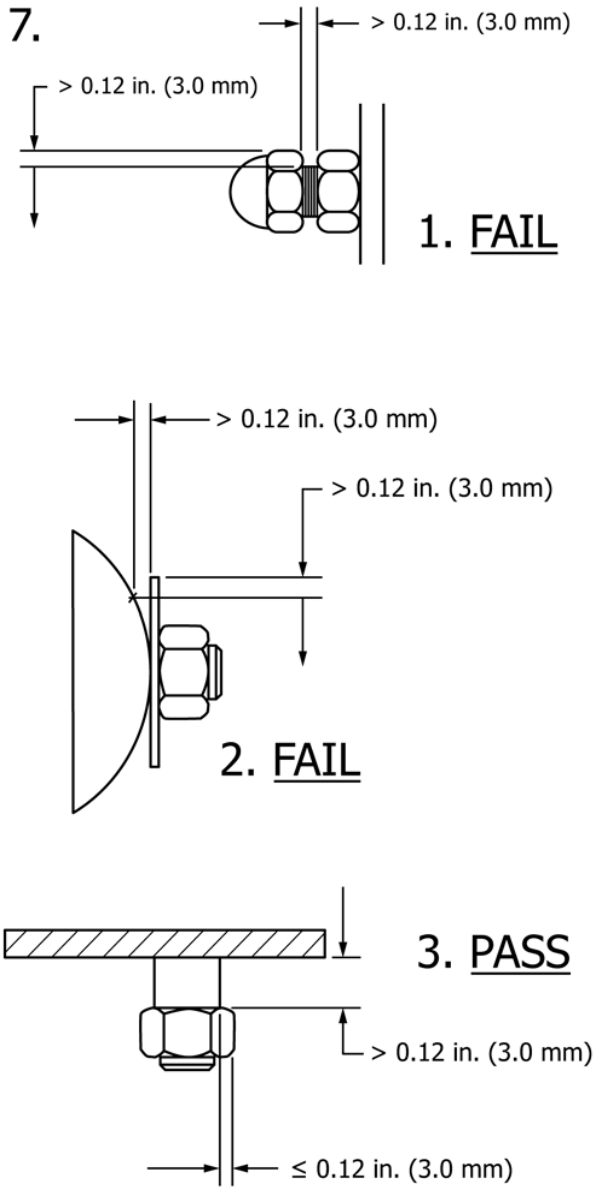 **FIG. A1.15 Entanglement Test Requirement Examples Reference Paragraph 6.4.4**		P

Clause	Requirement + Test	Result - Remark	Verdict
	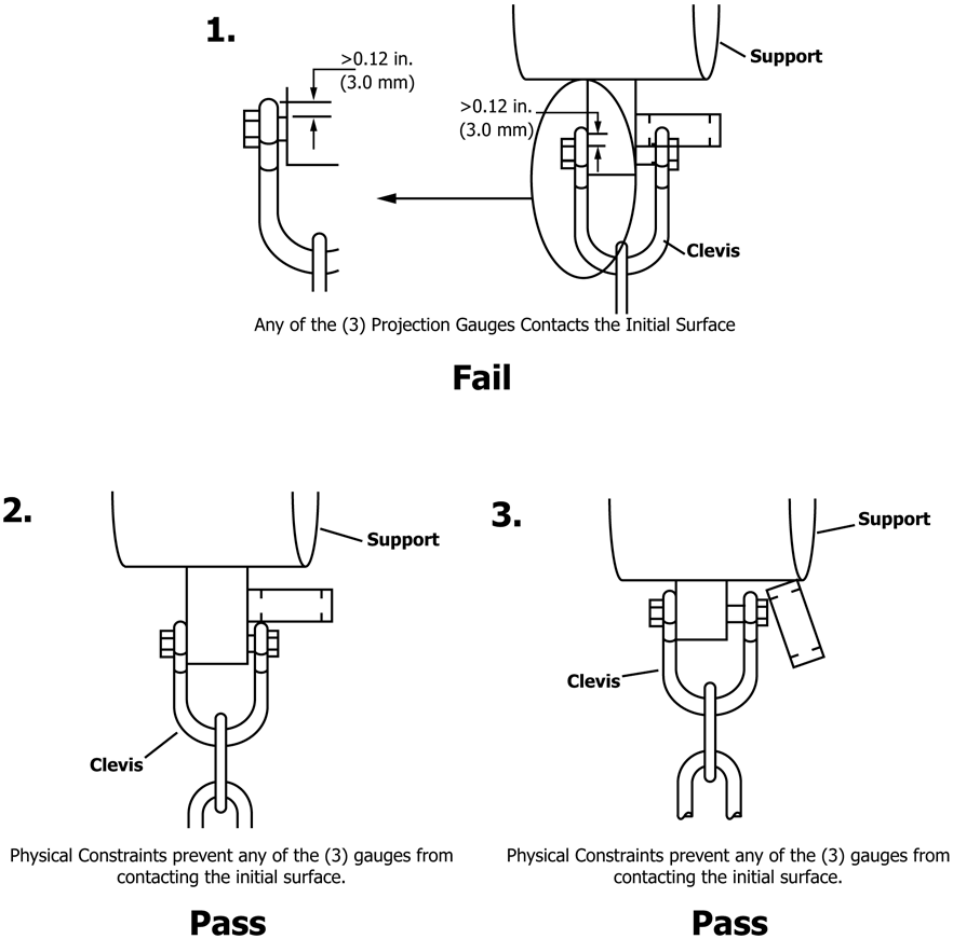 **FIG. A1.16 Entanglement Test Requirement Examples Continued Reference Paragraphs 6.4.1, 6.4.2, and 6.4.4**		P
	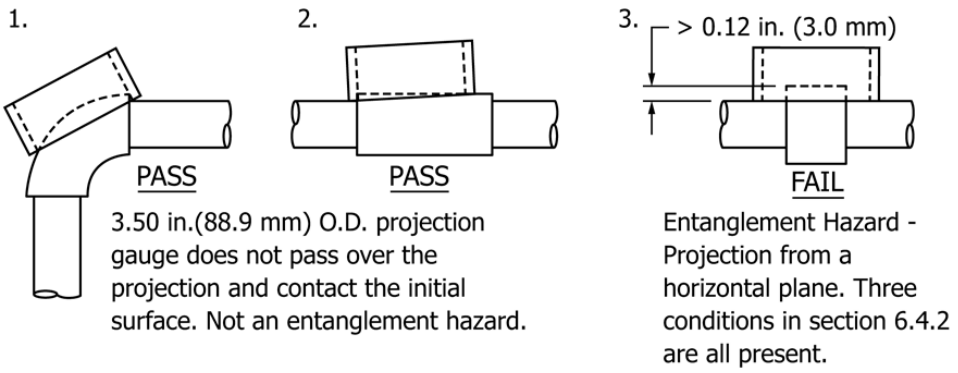 **FIG. A1.17 Entanglement Test Requirement Examples Reference Paragraphs 6.4.1 and 6.4.2**		P

Clause	Requirement + Test	Result - Remark	Verdict
	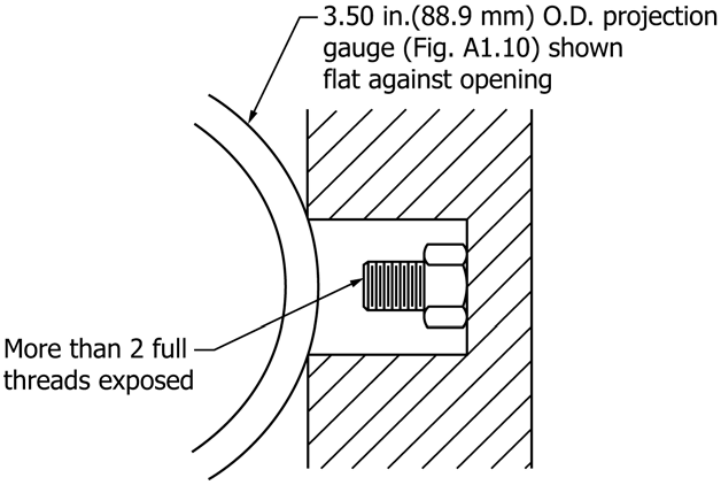 PASS Bolt end is recessed, 3.50 in (88.9 mm) O.D. projection gauge cannot be made to contact it - Not an entanglement hazard. **FIG. A1.18 Entanglement Test Requirement Examples Reference Paragraph 6.4.3**		P
	1. Checking Loops for 0.04 in. (1.0 mm) gap FAIL Upper Loop gap >0.04 in. (1.0 mm) FAIL Lower Loop gap >0.04 in. (1.0 mm) PASS Both Loops gap ≤0.04 in. (1.0 mm) 2. Both loops closed Checking lower loop projection FAIL FAIL End of lower loop extends beyond boundary of upper loop. PASS End of lower loop inside boundary of upper loop. 3. Both loops closed. Lower loop projection O.K. Checking upper loop FAIL Upper loop extends beyond body PASS Upper loop aligns with body PASS Upper loop overlaps body 4. Both loops closed. Lower loop projection O.K. Upper loop O.K. Checking lower loop alignment FAIL Lower loop overlaps body PASS Lower loop aligns with body **FIG. A1.19 Requirements for Fastening Devices Reference Paragraphs 6.4.5 and 6.4.5.1**		P

Clause	Requirement + Test	Result - Remark	Verdict
	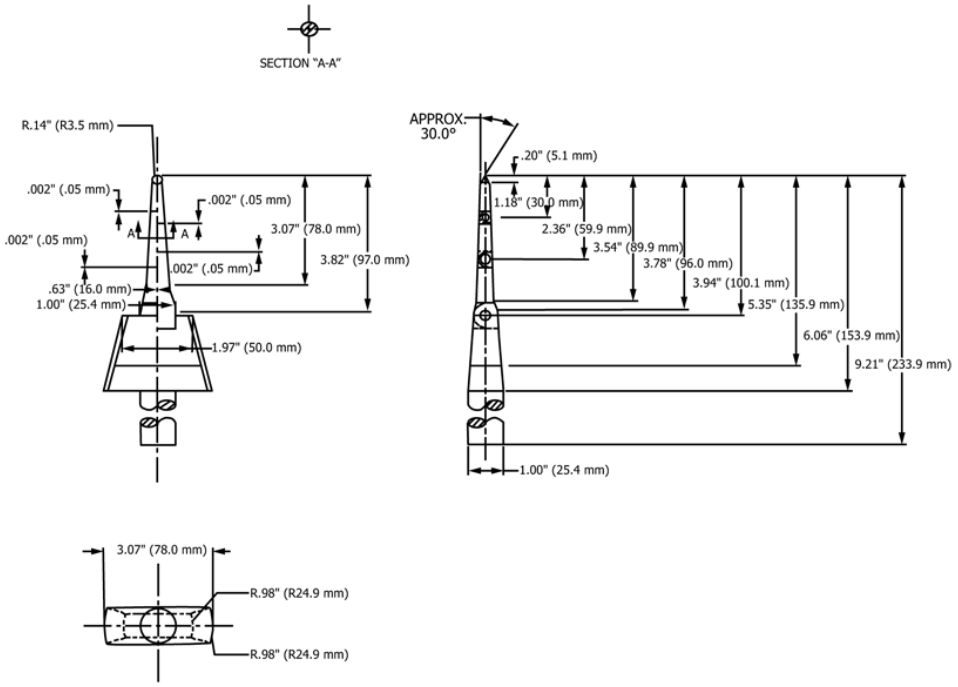 **FIG. A1.20 Accessibility Probe Reference Paragraph 6.5.1.1**		P
	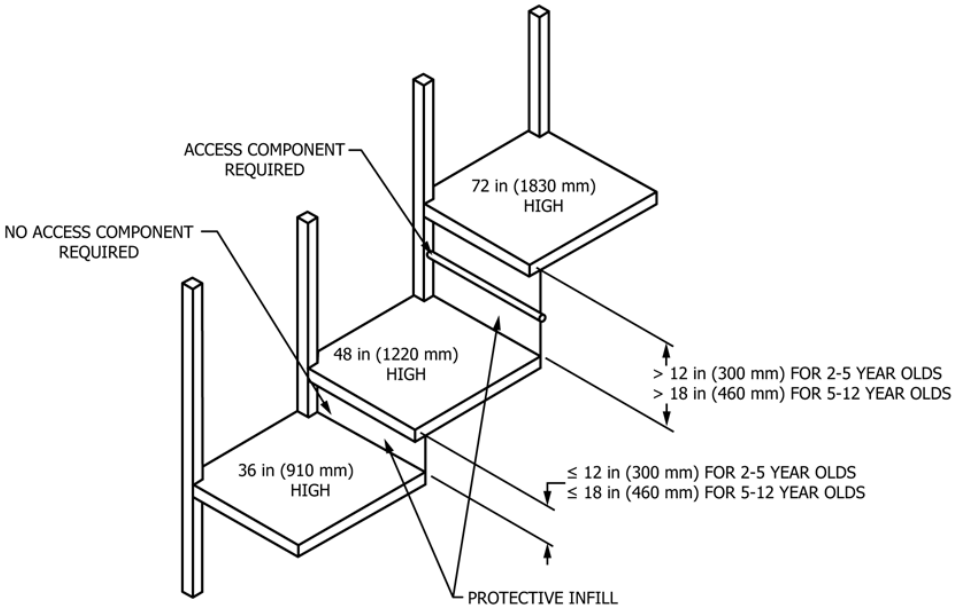 **FIG. A1.21 Adjacent Platforms Reference Paragraphs 7.5.7.1 and 7.5.7.3**		P

Clause	Requirement + Test	Result - Remark	Verdict
	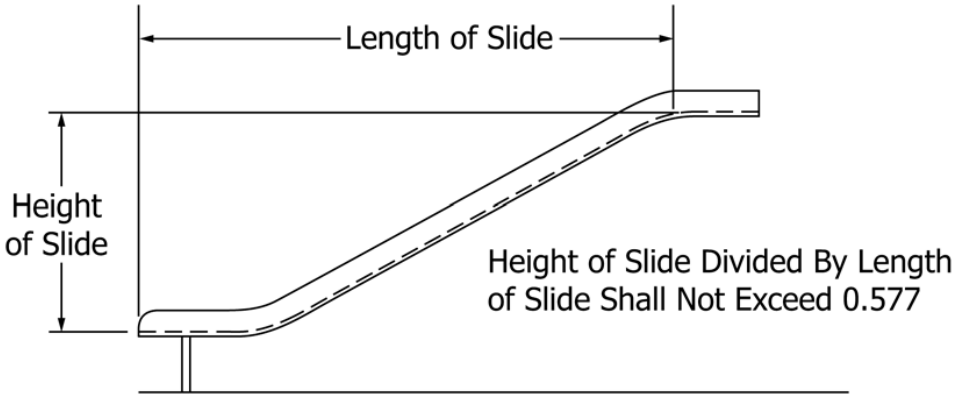 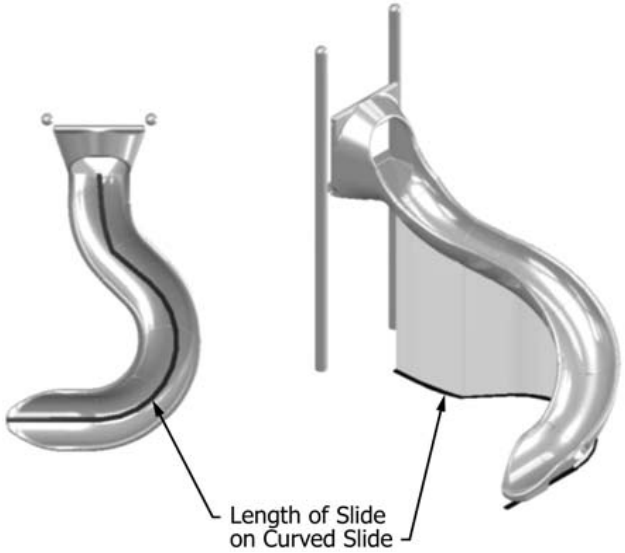 **FIG. A1.22 Height/Length Ratio of Sliding Surfaces Reference Paragraph 8.5.4.1**		P
	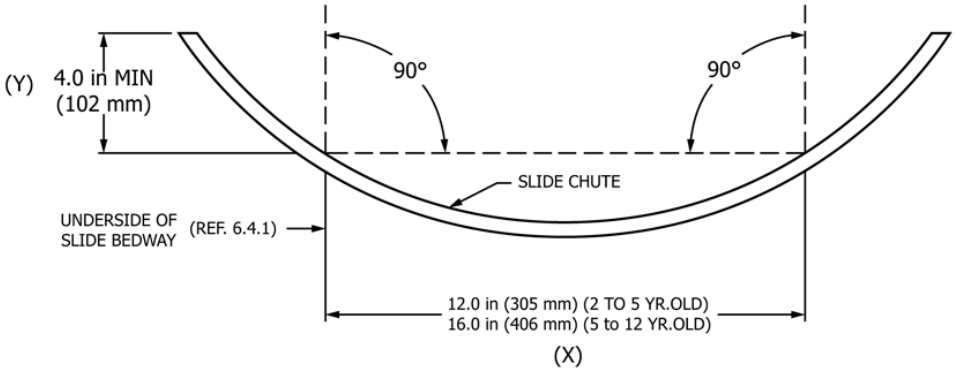 **FIG. A1.23 Formula for Minimum Vertical Sidewall Height Reference Paragraphs 6.4.1 and 8.5.4.5(1)**		P

Clause	Requirement + Test	Result - Remark	Verdict
	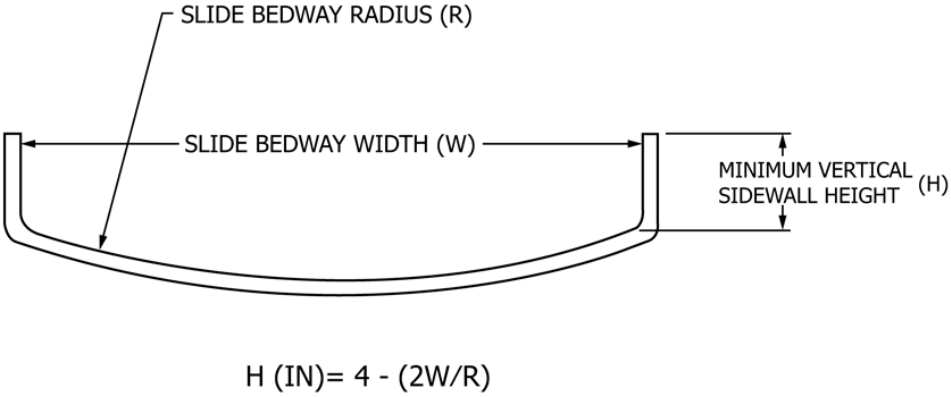 **FIG. A1.24 Formula for Minimum Vertical Sidewall Height Reference Paragraph 8.5.4.5(2)**		P
	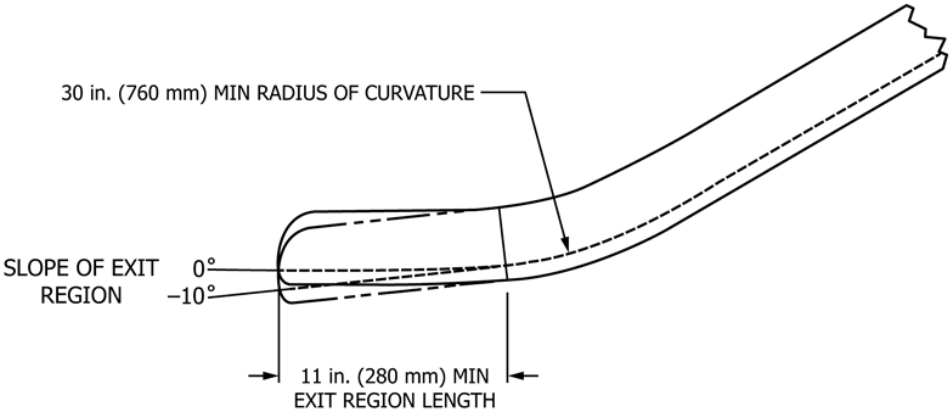 **FIG. A1.25 Slide Exit Requirements Reference Paragraphs 8.5.5.1, 8.5.5.2, and 8.5.5.4**		P
	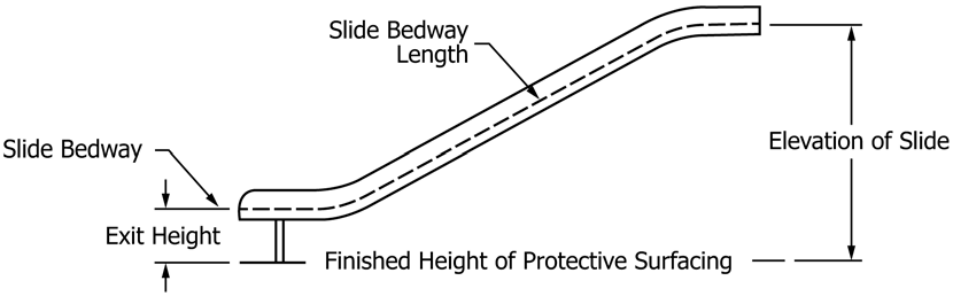 **FIG. A1.26 Height of Slide Exit Region and Slide Bedway Length**		P

Clause	Requirement + Test	Result - Remark	Verdict
	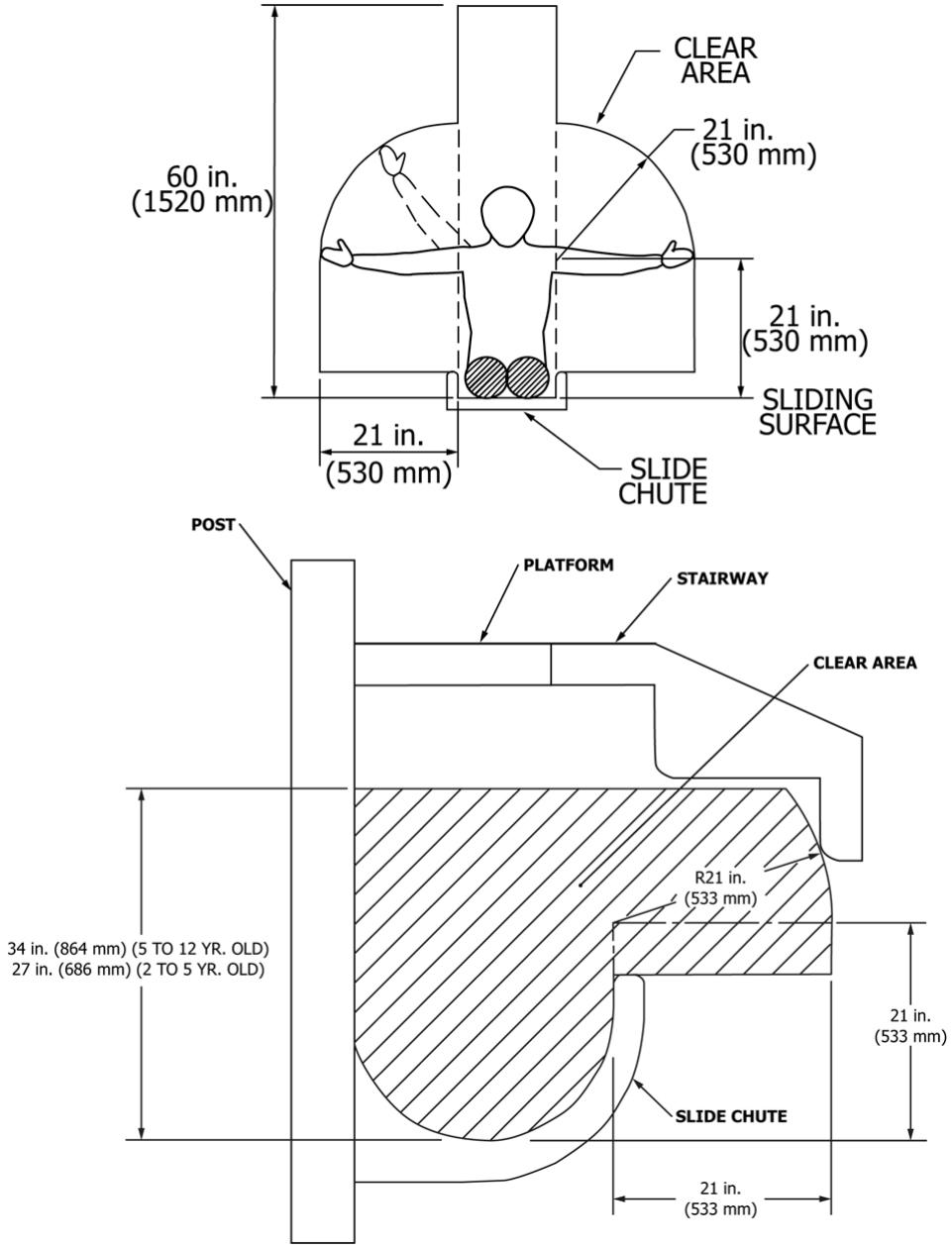 **FIG. A1.27 Slide and Spiral Slide Clearance Reference Paragraphs 8.5.6.1 and 8.5.6.2**		P

Clause	Requirement + Test	Result - Remark	Verdict
	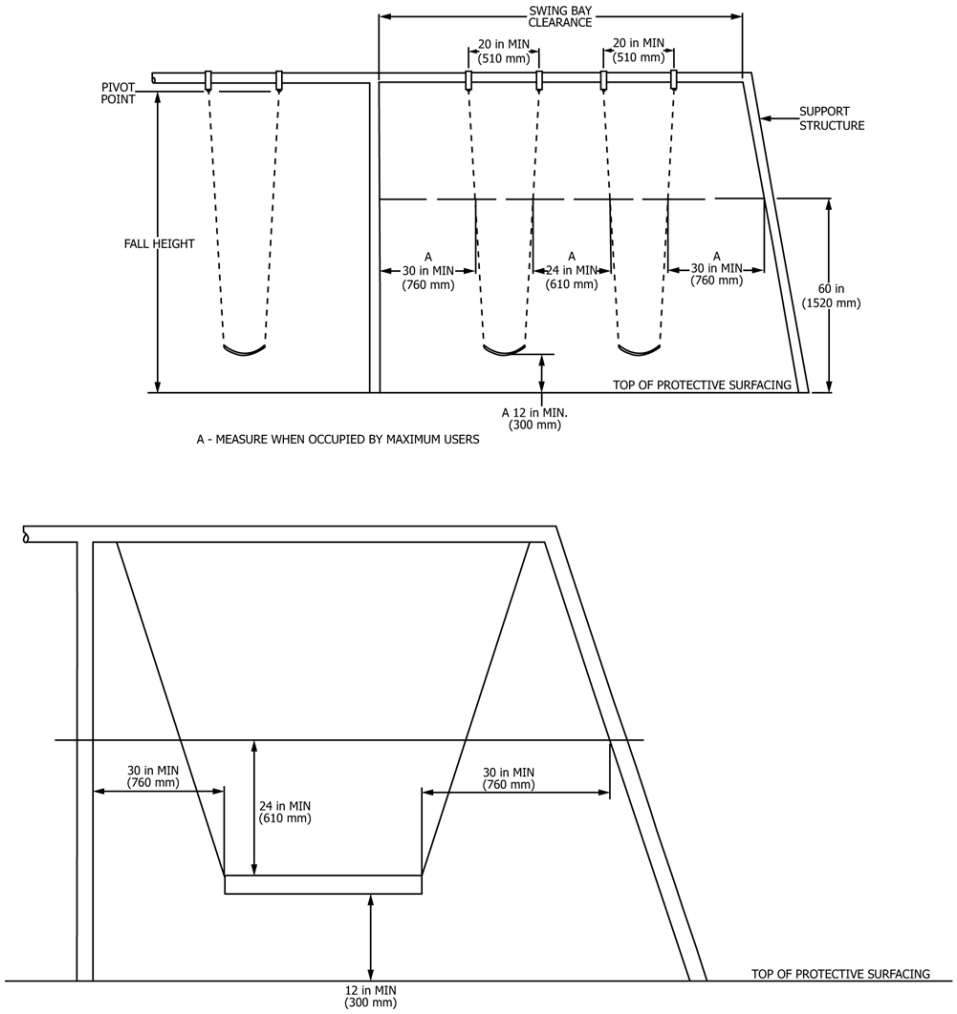 **FIG. A1.28 To/Fro Swings Reference Paragraphs 8.6.5.1(2) and 8.6.5.1(3)**		P
	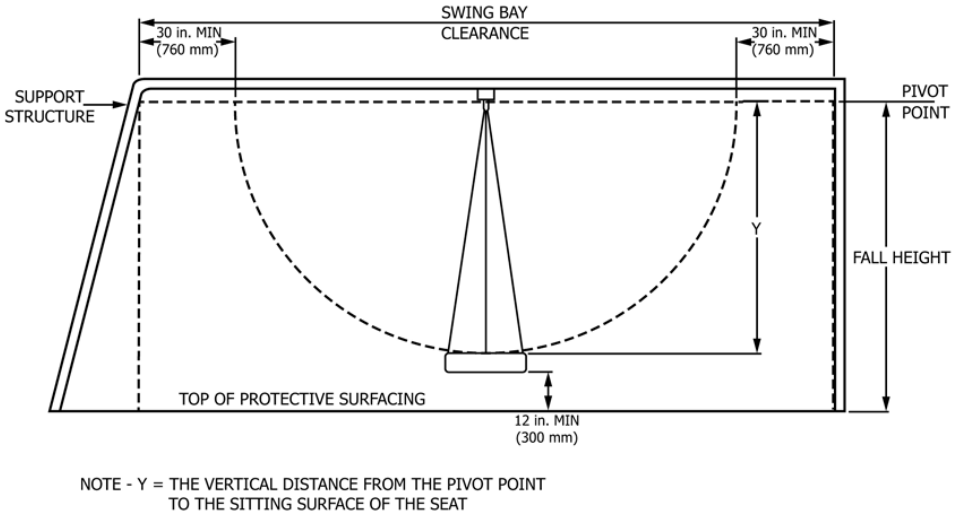 **FIG. A1.29 Rotating (Multiple Axis) Swings Reference Paragraph 8.6.5.2(1)**		N/A

Clause	Requirement + Test	Result - Remark	Verdict
	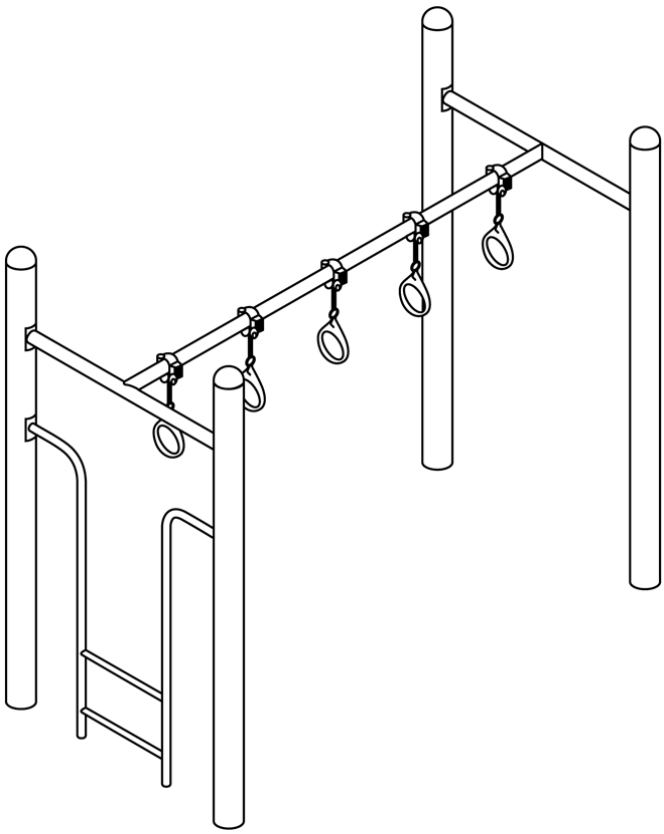 FIG. A1.30 Example of Ring Ladder Reference Paragraph 8.3.5		N/A
	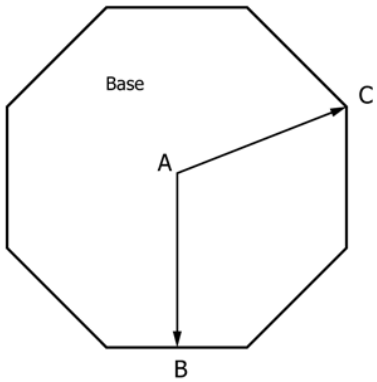 A - Axis of rotation AB - Minimum radius AC - Maximum radius The difference between dimension AC and AB should not exceed 2 inches (50 mm). FIG. A1.31 Minimum and Maximum Radii of Noncircular Rotating Equipment Reference Paragraph 8.8.1.2		N/A

Clause	Requirement + Test	Result - Remark	Verdict
	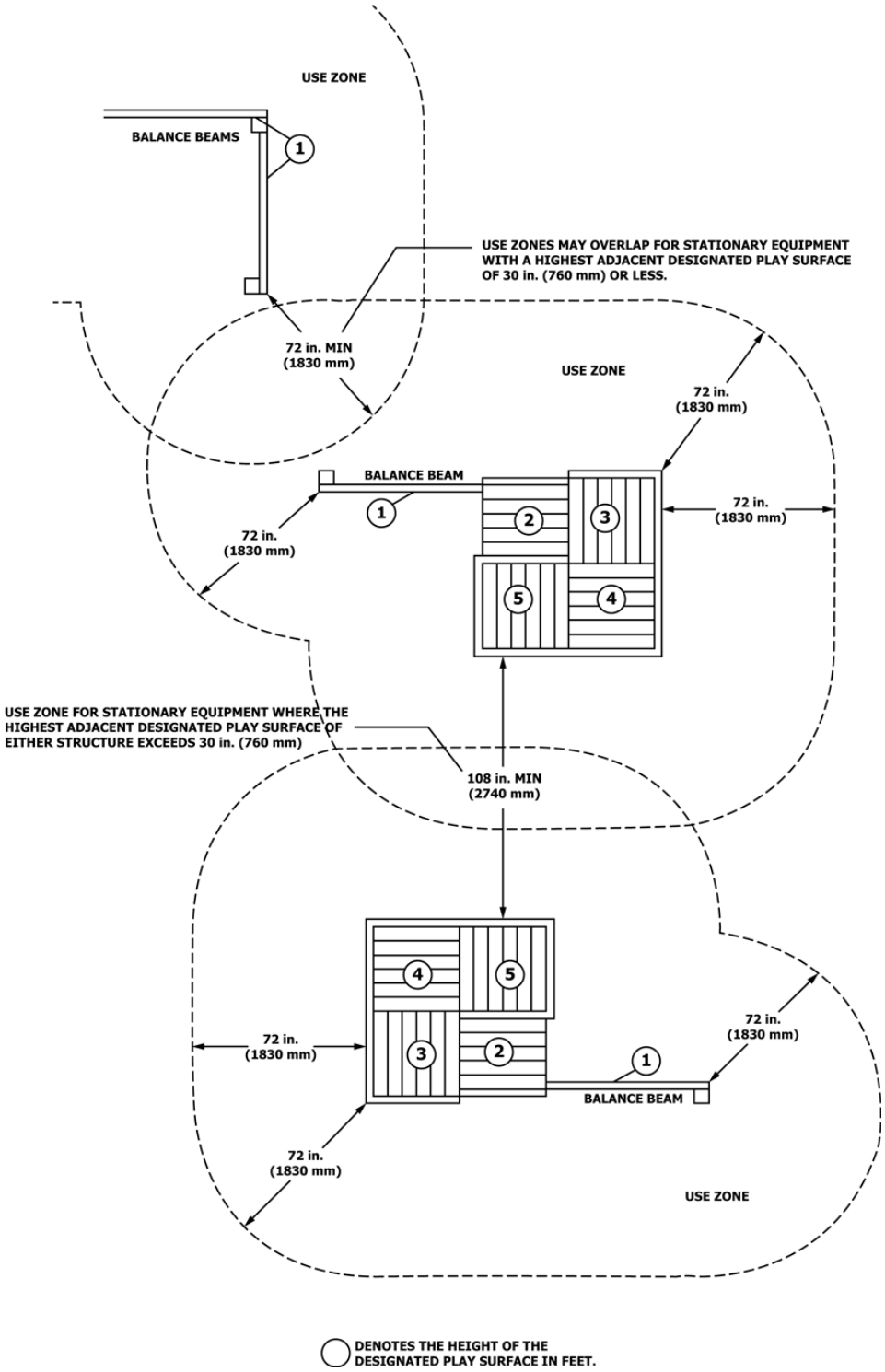 **FIG. A1.32 Use Zones for Stationary Equipment Reference Paragraphs 9.2 and 9.2.3**		P

Clause	Requirement + Test	Result - Remark	Verdict
	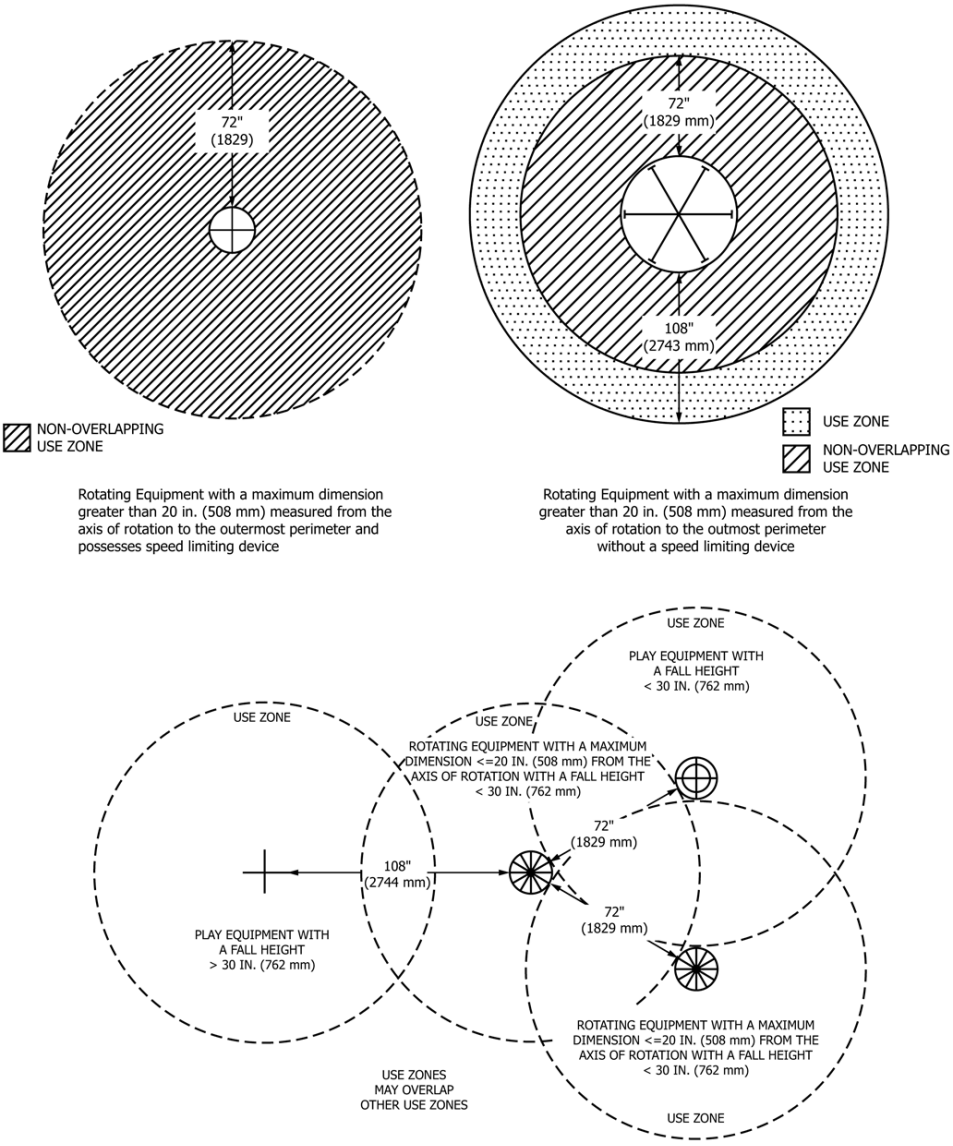 **FIG. A1.33 Use Zones for Rotating Equipment Reference Paragraphs 8.8.3.4, 9.3.1, 9.3.2, and 9.3.3.**		N/A

Clause	Requirement + Test	Result - Remark	Verdict
	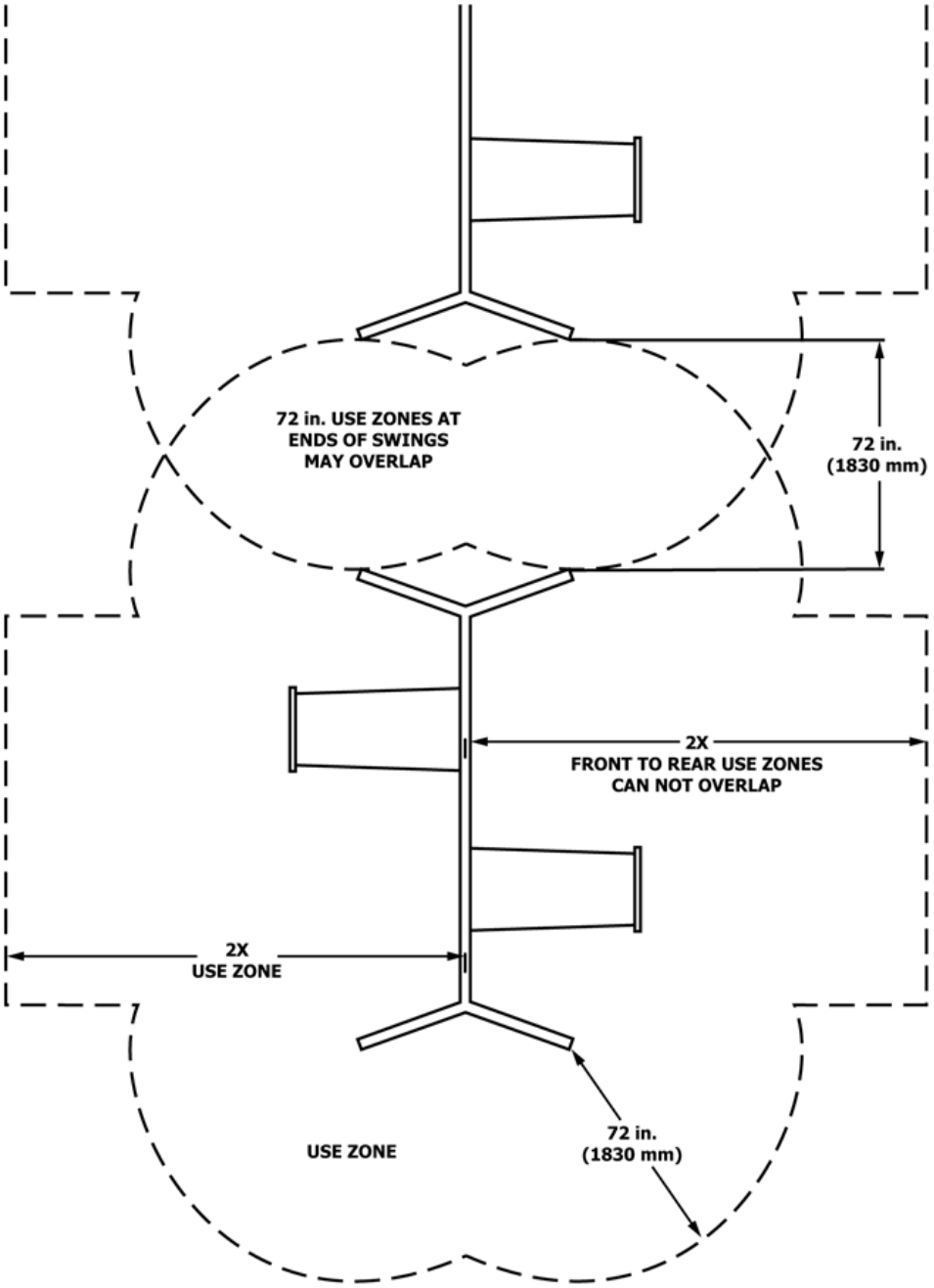 NOTE: X = THE VERTICAL DISTANCE FROM THE PROTECTIVE SURFACE TO THE PIVOT POINT OF THE SWING **FIG. A1.34 Use Zones for To-Fro Swings Reference Paragraphs 9.4.1.1, 9.4.1.3, 9.4.1.4, 9.4.1.5, and 9.4.1.5(1)**		P

Clause	Requirement + Test	Result - Remark	Verdict
	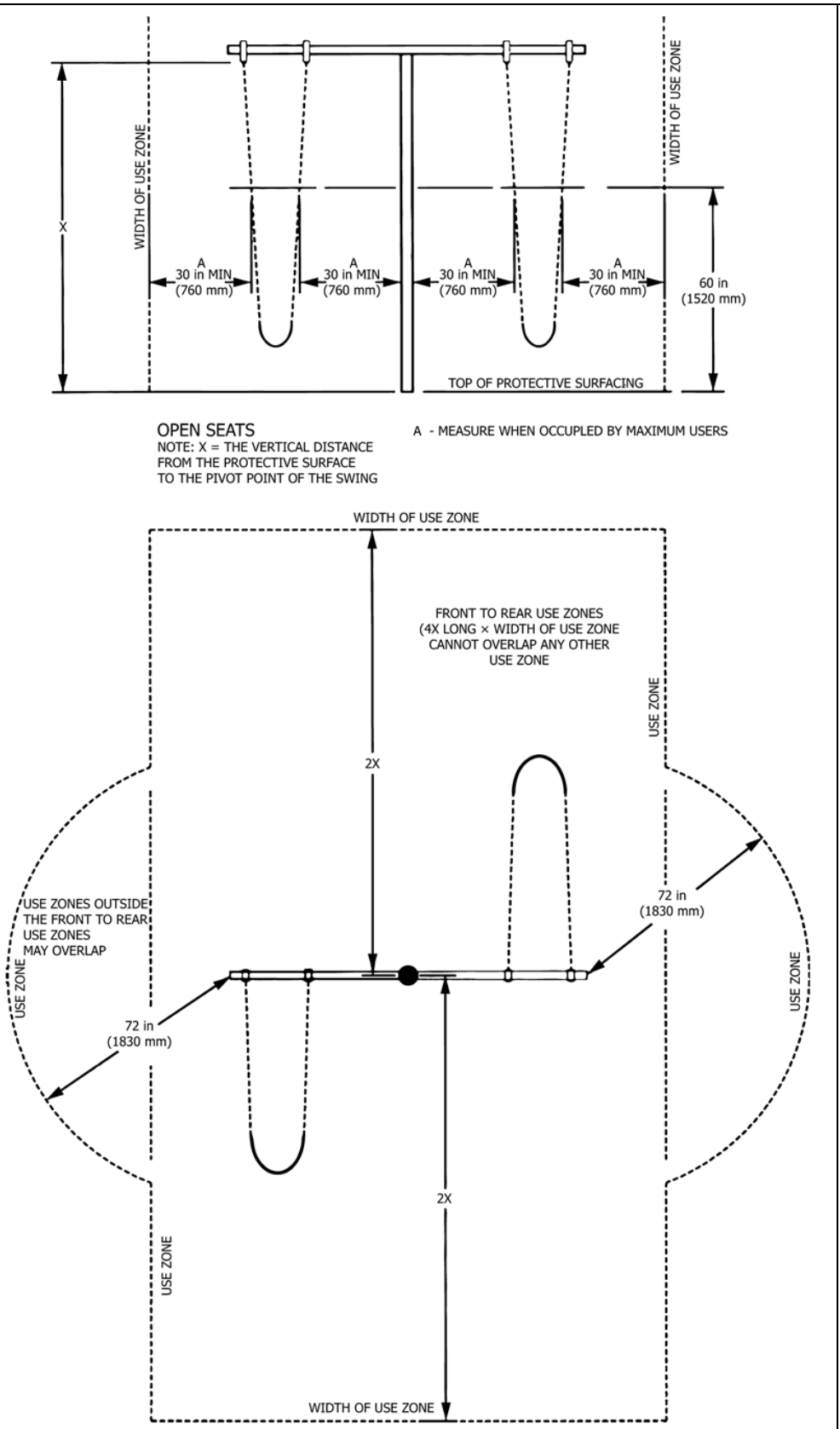		P

FIG. A1.35 Use Zones for To-Fro Swings "T" Swings With Open Seats Reference Paragraphs ~~9.4.1.1~~, ~~9.4.1.3~~, ~~9.4.1.4~~, ~~9.4.1.5~~, and ~~9.4.1.5~~(1)

Clause	Requirement + Test	Result - Remark	Verdict
	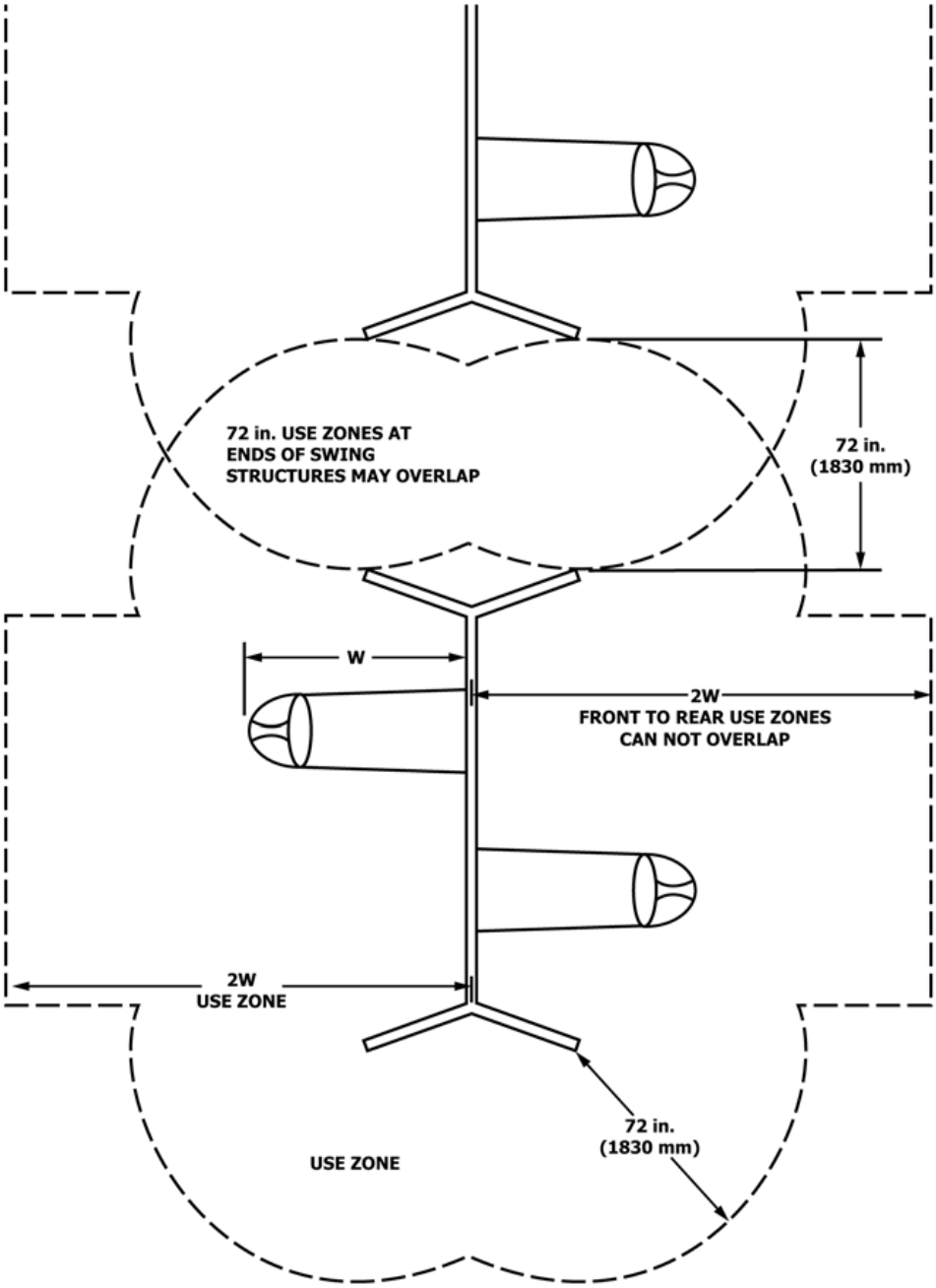 NOTE: W = THE VERTICAL DISTANCE FROM THE TOP OF THE SITTING SURFACE TO THE PIVOT POINT **FIG. A1.36 Use Zones for To-Fro Swings With Fully Enclosed Swing Seats Reference Paragraphs 9.4.1.2, 9.4.1.3, 9.4.1.4, 9.4.1.5, and 9.4.1.5(1)**		P

Clause	Requirement + Test	Result - Remark	Verdict
	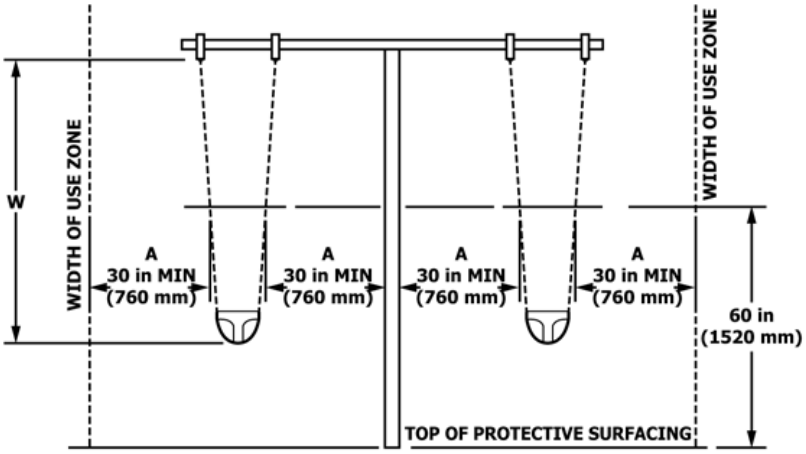 FULLY ENCLOSED SEATS NOTE: W = THE VERTICLE DISTANCE FROM THE TOP OF THE SITTING SURFACE TO THE PIVOT POINT OF SWING A -MEASURE WHEN OCCUPIED BY MAXIMUM USERS 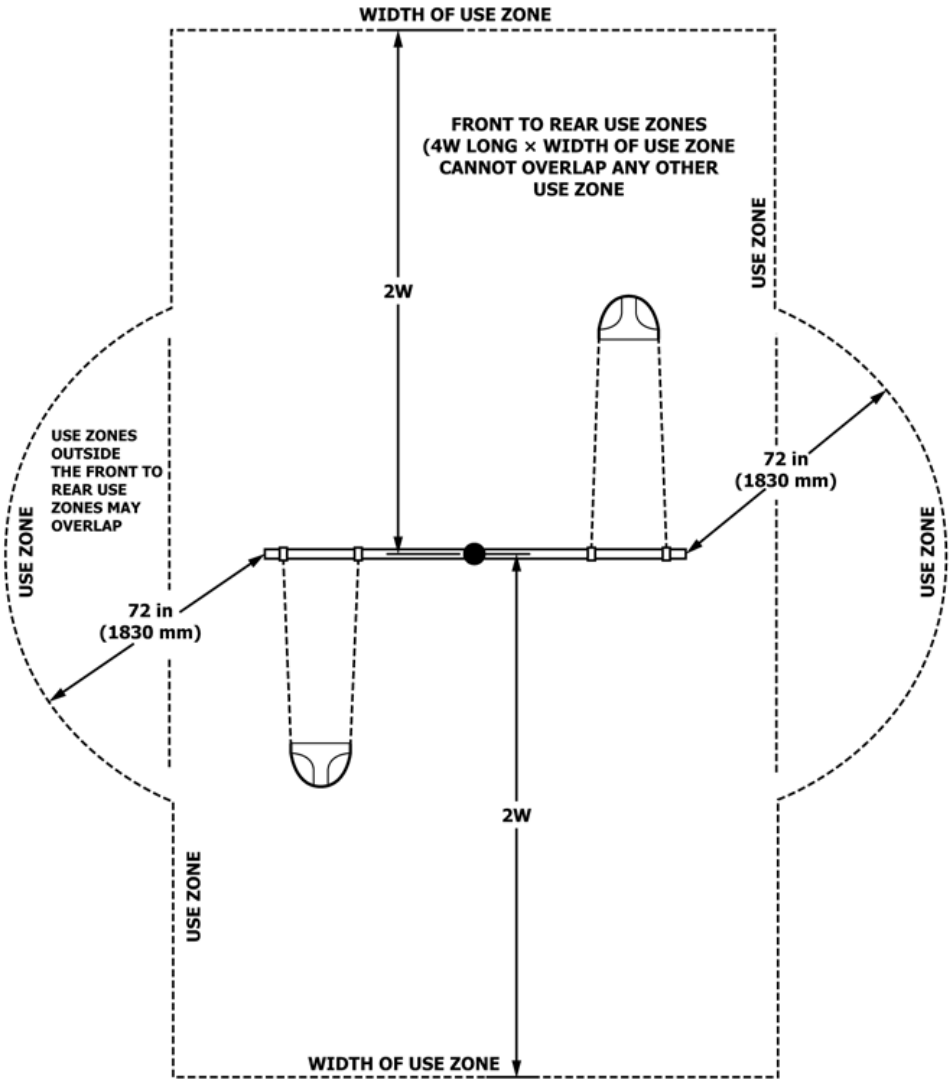 **FIG. A1.37 Use Zones for To-Fro "T" Swings With Fully Enclosed Seats Reference Paragraphs 9.4.1.2, 9.4.1.3, 9.4.1.4, 9.4.1.5, and 9.4.1.5(1)**		P

Clause	Requirement + Test	Result - Remark	Verdict
	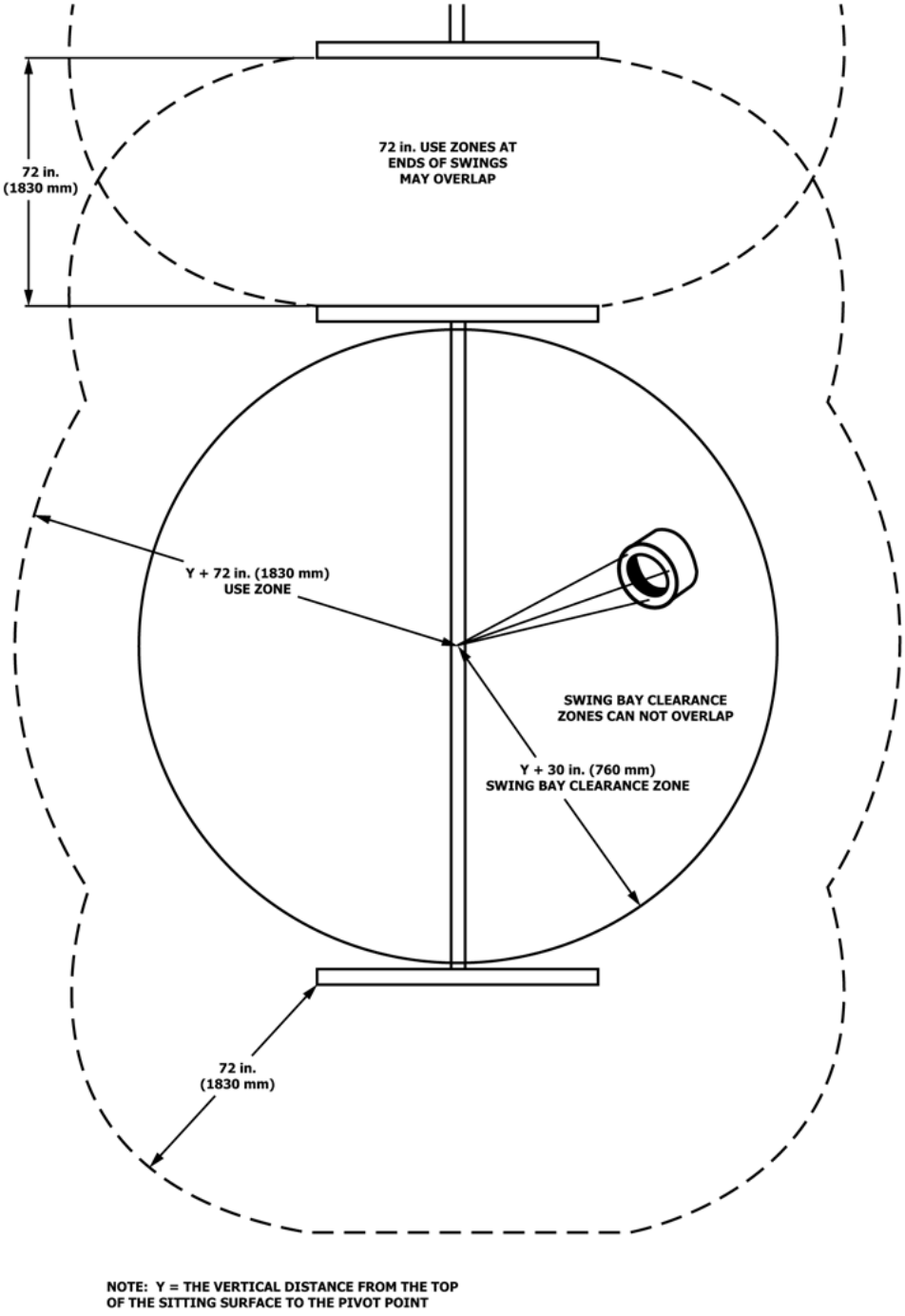 **FIG. A1.38 Use Zones for Rotating Swings Reference Paragraphs 9.4.2 and 9.4.2.4**		N/A

Clause	Requirement + Test	Result - Remark	Verdict
	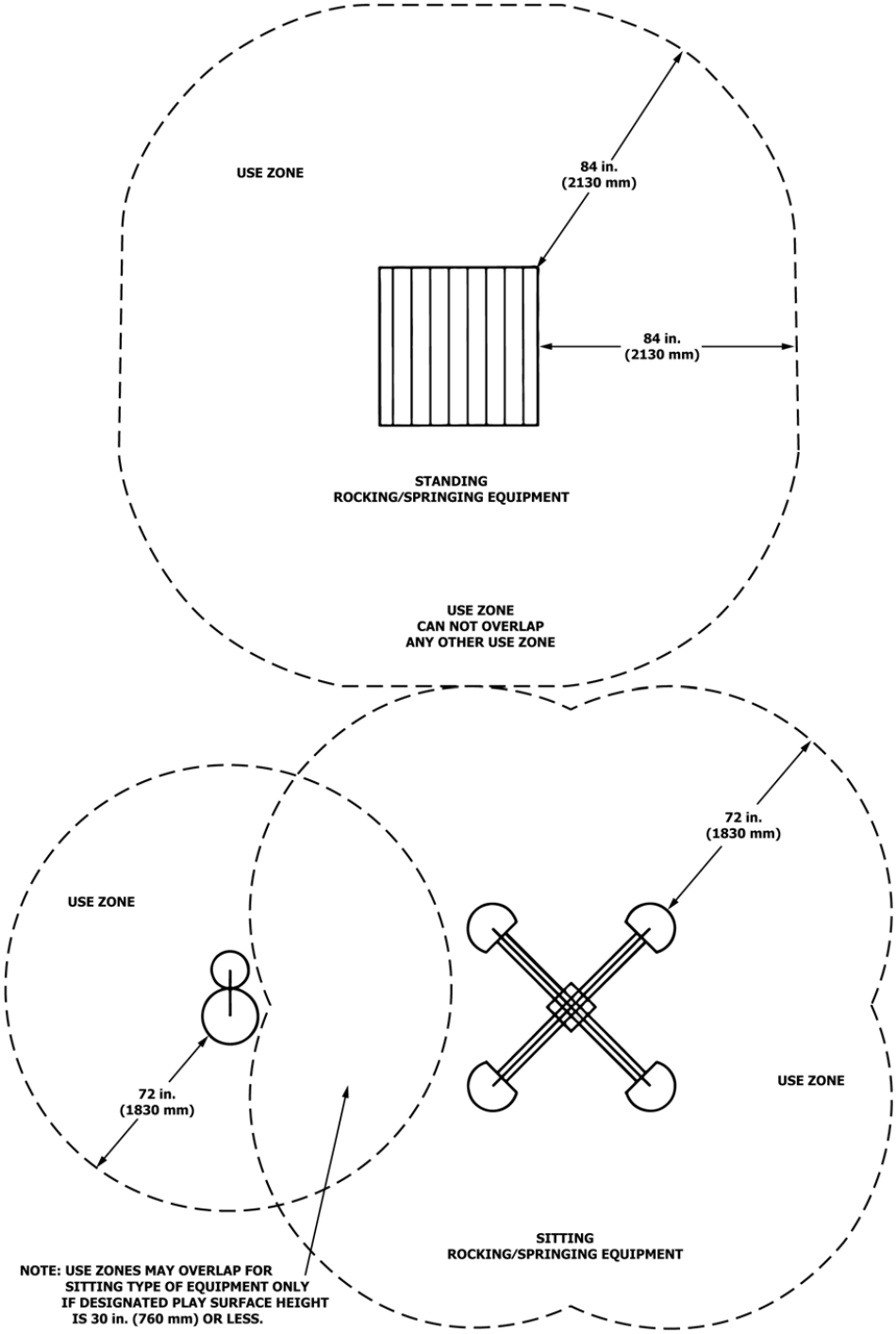 **FIG. A1.39 Use Zones for Rocking/Springing Equipment Reference Paragraphs 9.5**		N/A

Clause	Requirement + Test	Result - Remark	Verdict
	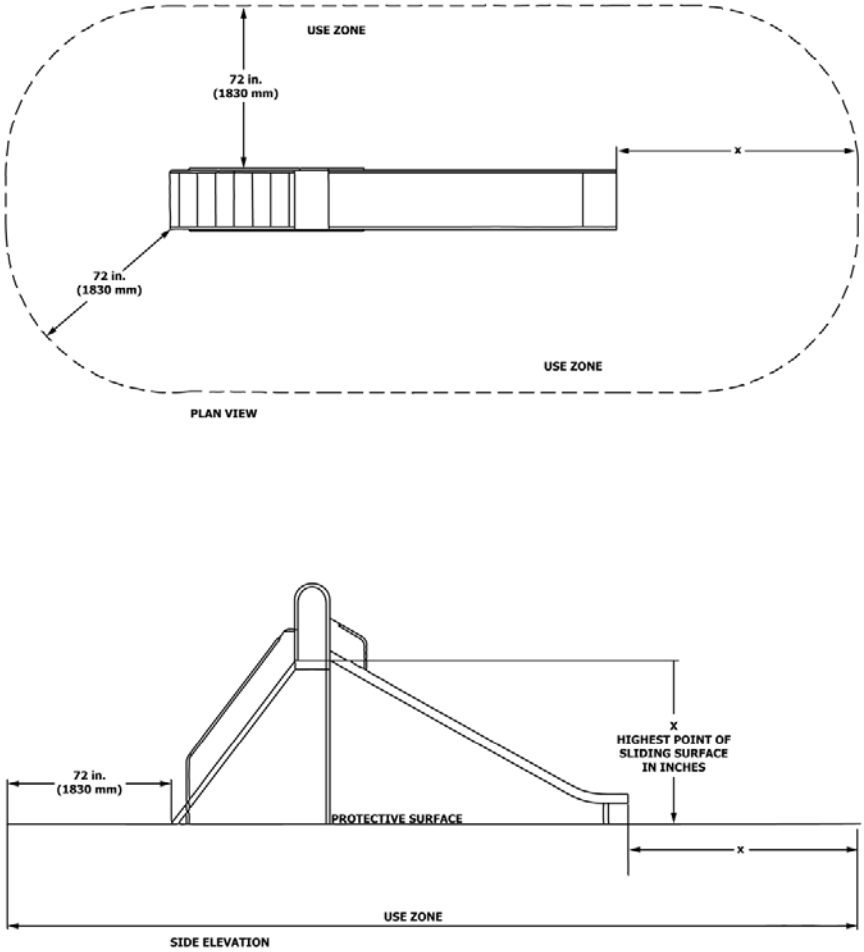 **FIG. A1.40 Use Zones for Slides Reference Paragraph 9.6**		P
	NOTE: X = THE VERTICAL DISTANCE FROM THE PROTECTIVE SURFACE AT THE LOWER EXIT TO THE HIGHEST POINT OF THE SLIDING SURFACE 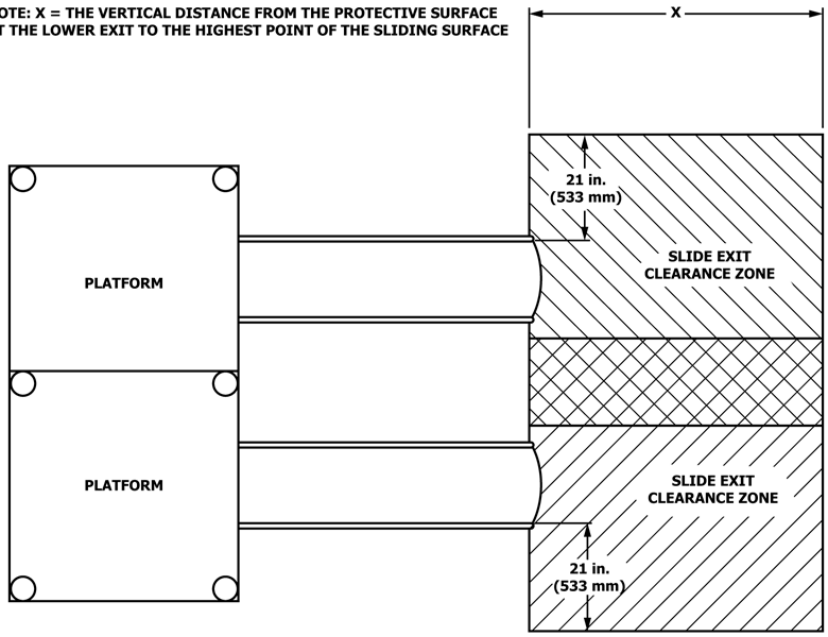 **FIG. A1.41 Overlap of Parallel of Diverging Slide Paths (Pass) Reference Paragraph 9.6.3**		P

Clause	Requirement + Test	Result - Remark	Verdict
	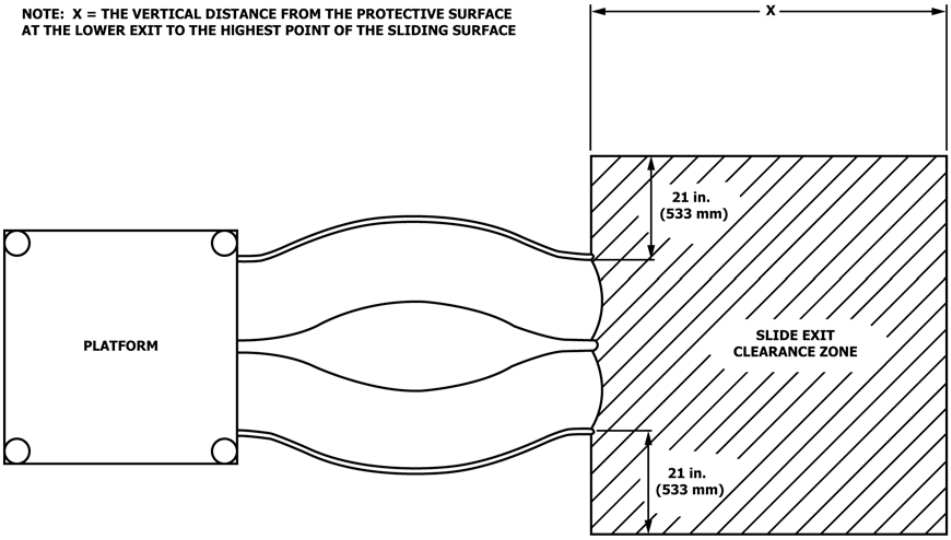 **FIG. A1.42 Slide Exit Clearance Reference Paragraph 9.6.3**		P
	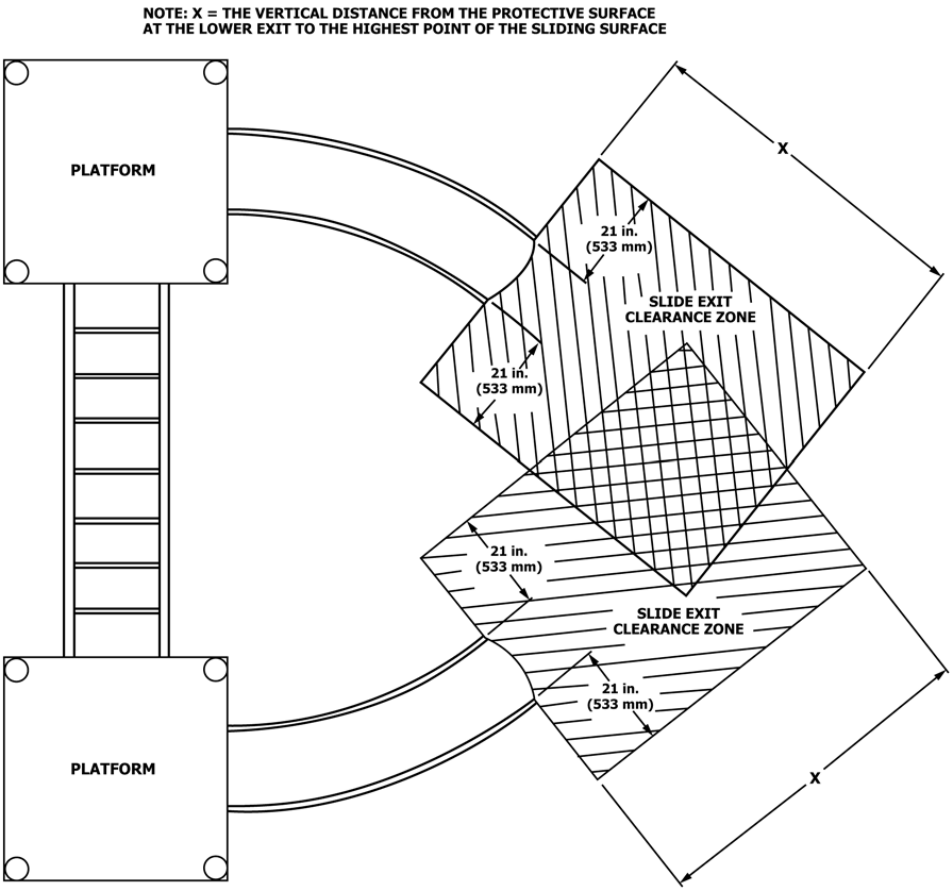 **FIG. A1.43 Overlap of Converging Slide Paths (Fail) Reference Paragraph 9.6.3**		P

Clause	Requirement + Test	Result - Remark	Verdict
	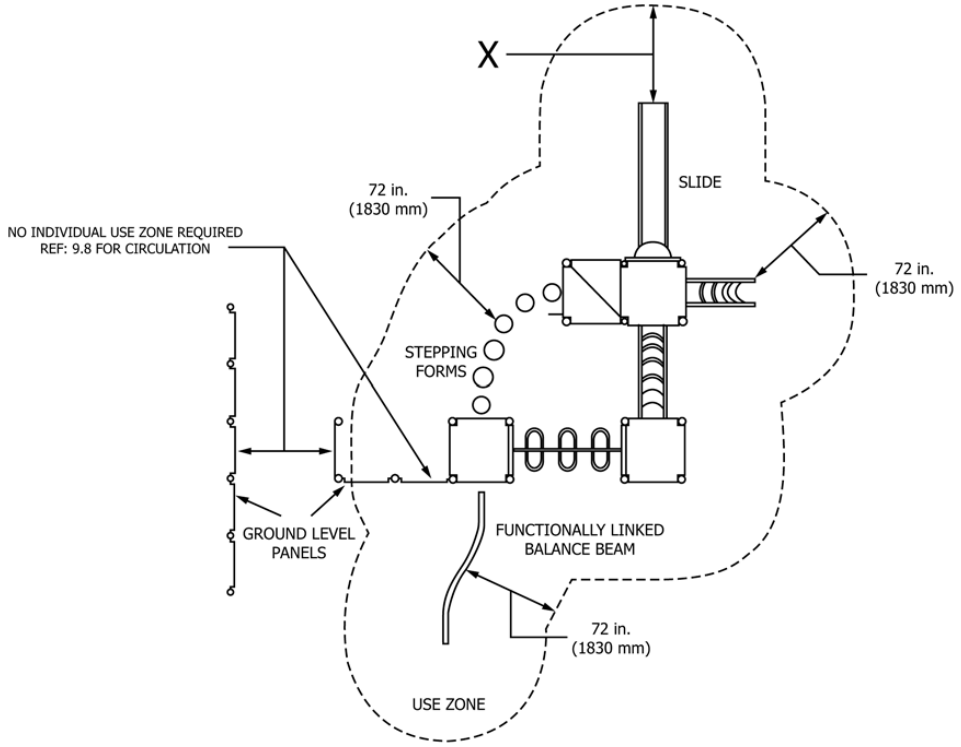 **FIG. A1.44 Composite Play Structure Reference Paragraphs 3.1.45, 9.2.2, and 9.7**		P
	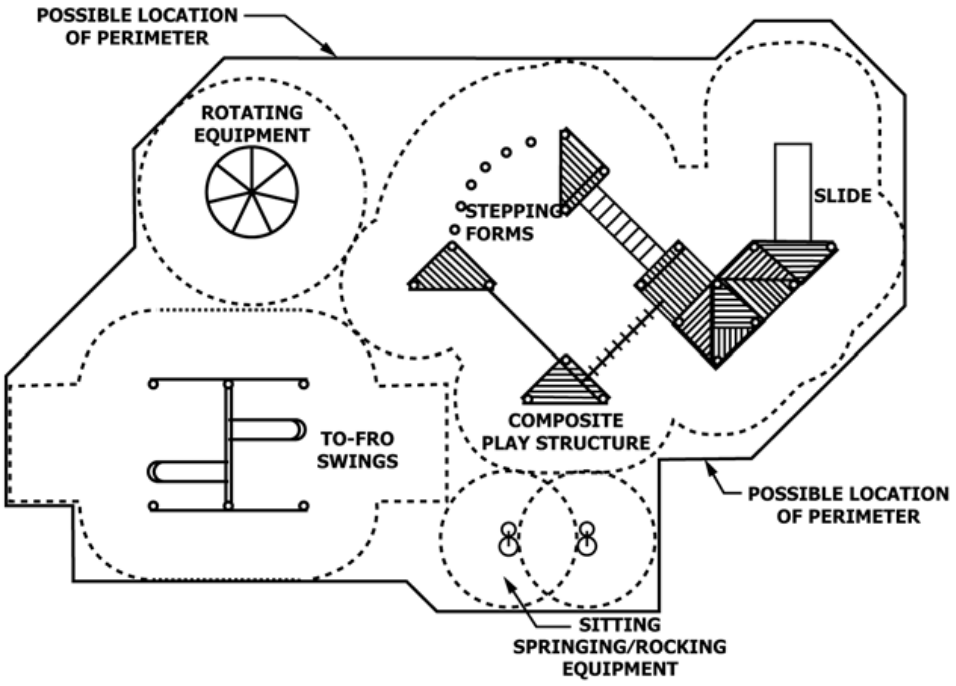 **FIG. A1.45 Placement of Equipment Reference Paragraph 9.8**		P

Clause	Requirement + Test	Result - Remark	Verdict
	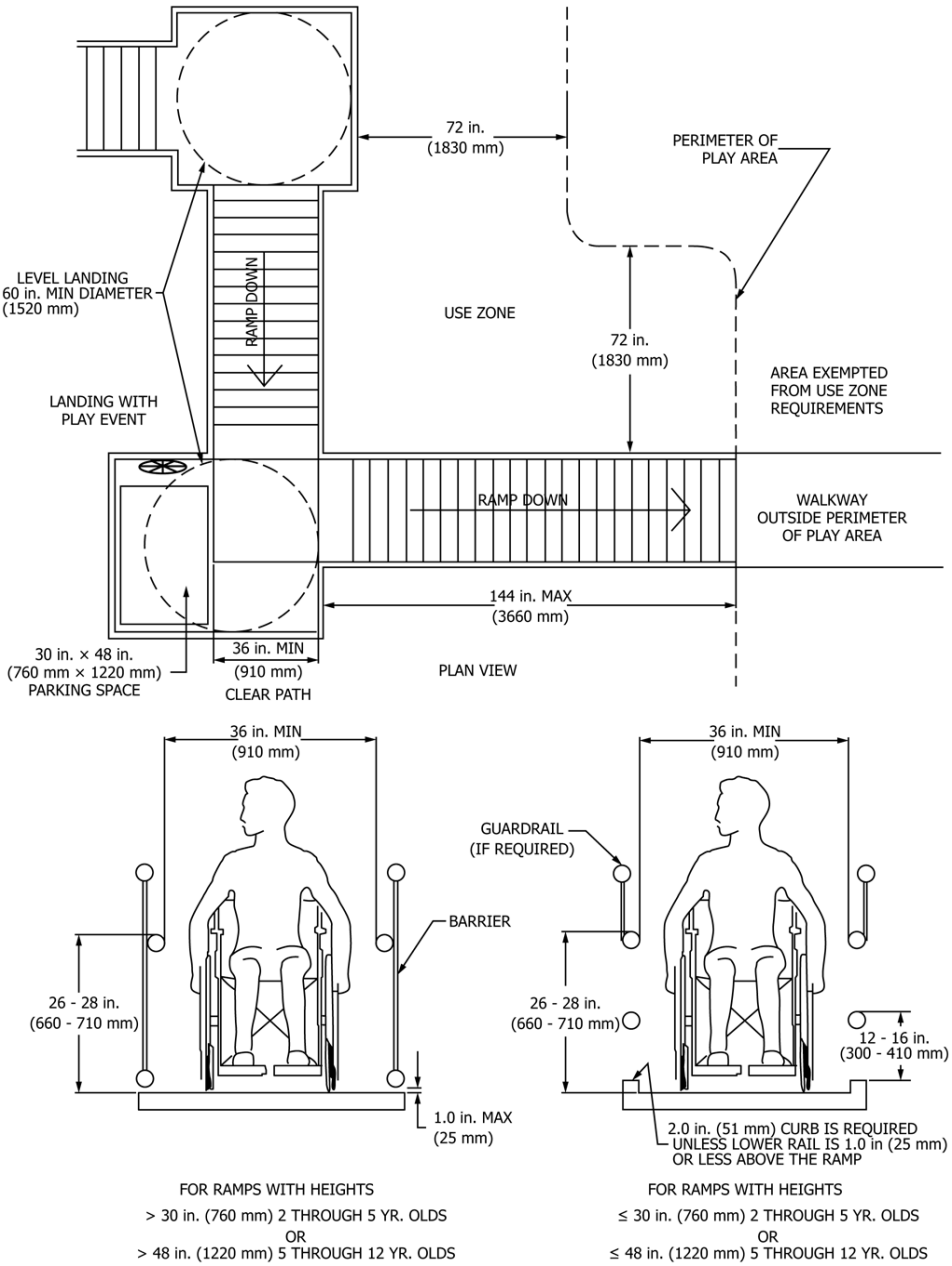 **FIG. A1.46 Ramps Intended for Wheelchair Use Reference Paragraphs 7.1.2, 7.2.4, 7.2.5, 7.5.5.5, and 7.5.5.6**		N/A

Clause	Requirement + Test	Result - Remark	Verdict
	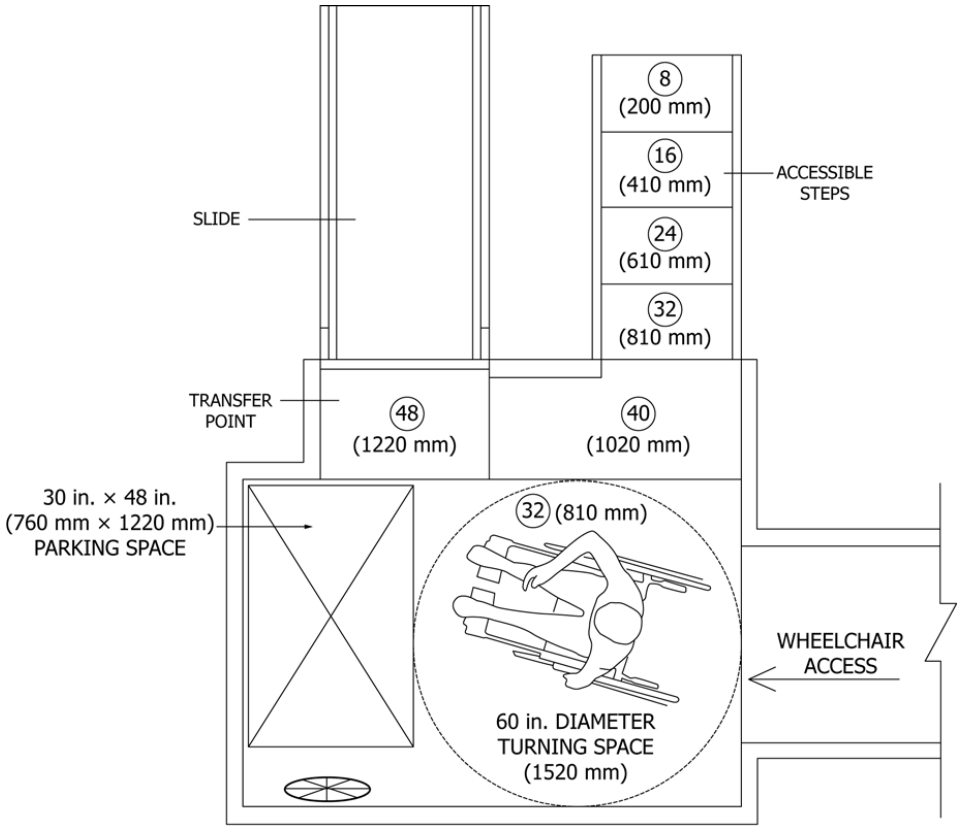 NOTE: TURNING SPACE AND PARKING SPACE MAY NOT OVERLAP NOTE: (40) DENOTES THE HEIGHT OF THE DESIGNATED PLAY SURFACE IN INCHES **FIG. A1.47 Transfer Point and Return on a Wheelchair Accessible Platform Reference Paragraph 7.5.4**		N/A
	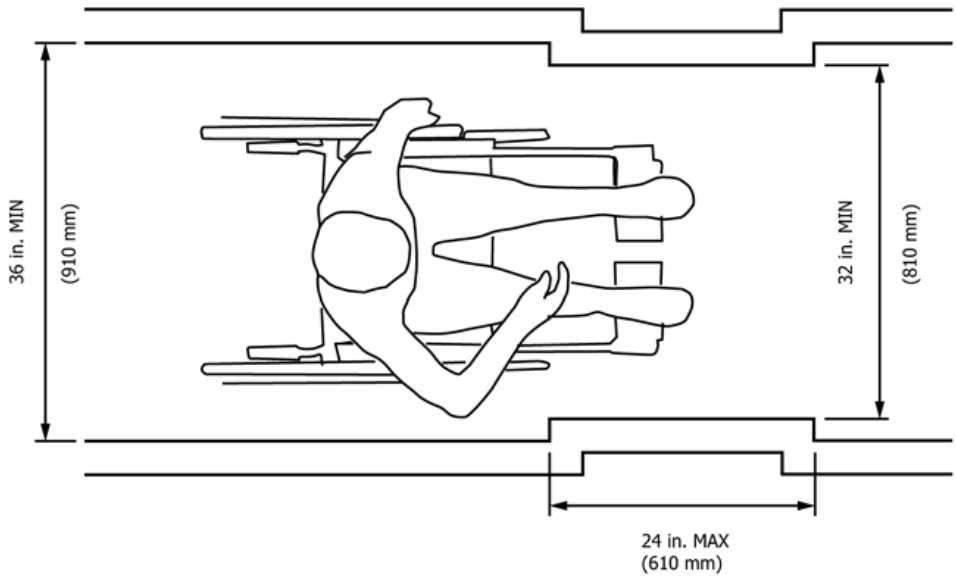 **FIG. A1.48 Minimum Clear Width Reference Paragraph 7.5.3**		N/A

Clause	Requirement + Test	Result - Remark	Verdict
	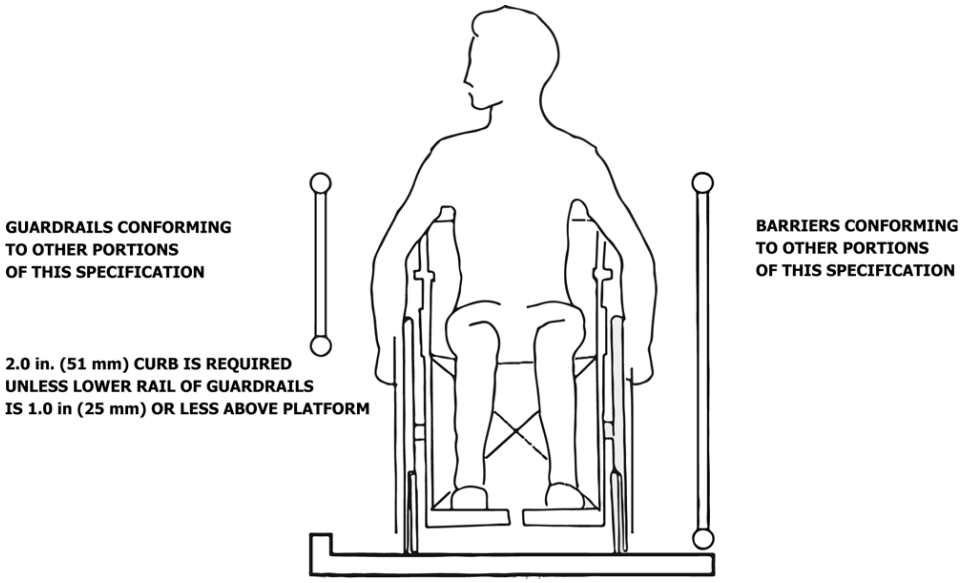 **FIG. A1.49 Wheelchair Accessible Platforms Reference Paragraph 7.5.5.1**		N/A
	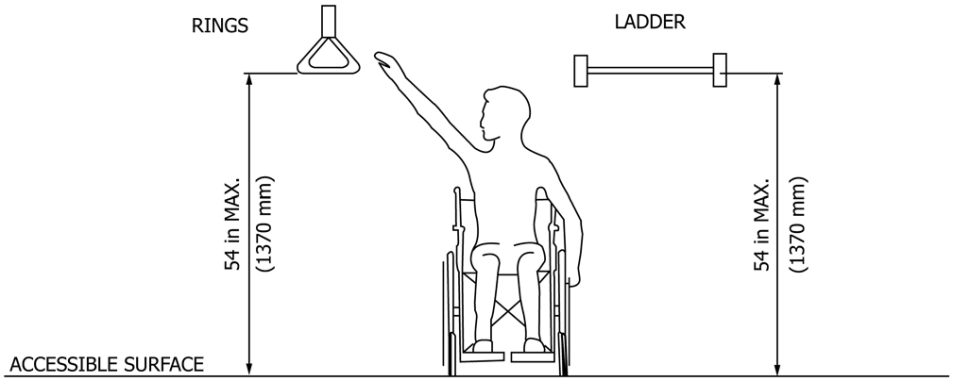 **FIG. A1.50 Horizontal Rings and Ladders, etc. Reference Paragraph 8.3.3**		N/A

Clause	Requirement + Test	Result - Remark	Verdict
	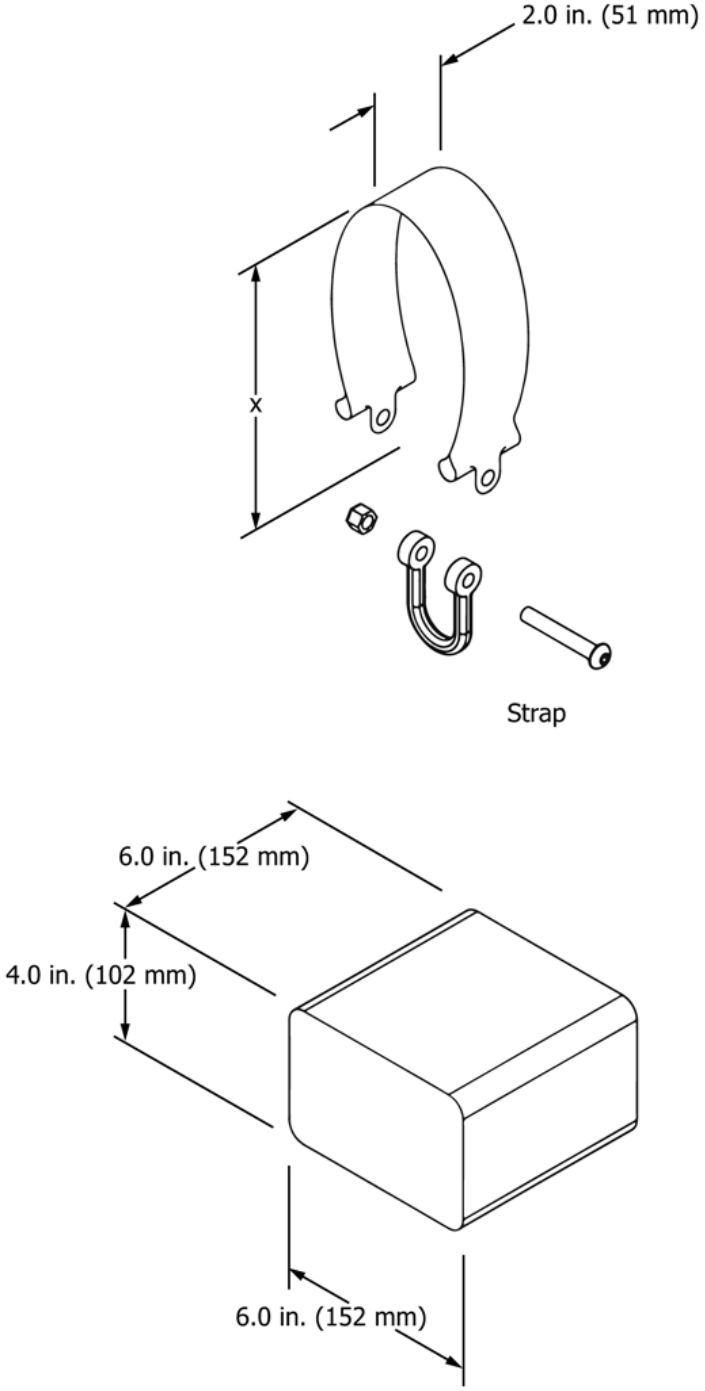 Note 1-Block made of any rigid material. Note 2-Vary dimension X as required. **FIG. A1.51 Load Distribution Devices Reference Paragraph 12.2.1**		N/A

Clause	Requirement + Test	Result - Remark	Verdict
	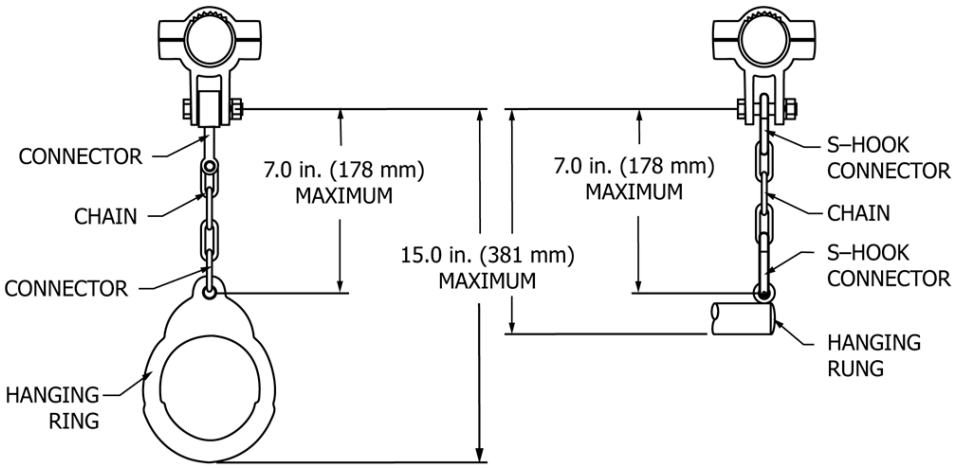 **FIG. A1.52 Hanging Ring and Hanging Rung-Dimensional Details Reference Paragraph 8.3.5**		N/A
	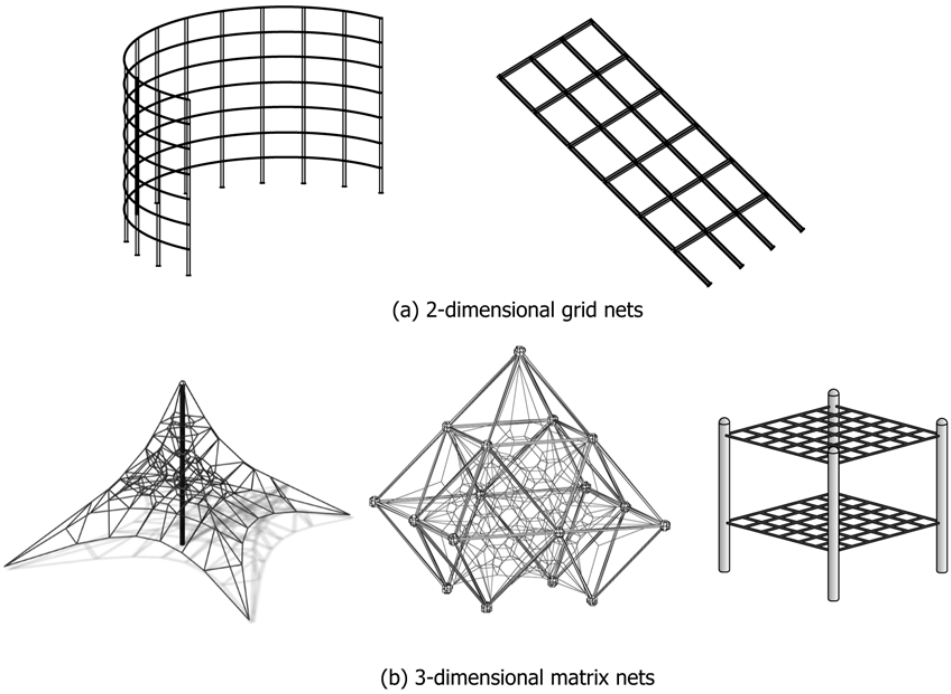 **FIG. A1.53 2-Dimensional Grids and 3-Dimensional Matrix Nets Reference Paragraph 3.1.5**		P

Clause	Requirement + Test	Result - Remark	Verdict
	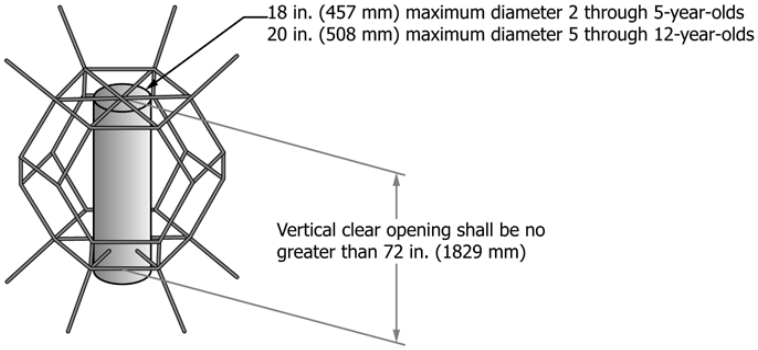 (1) Pass 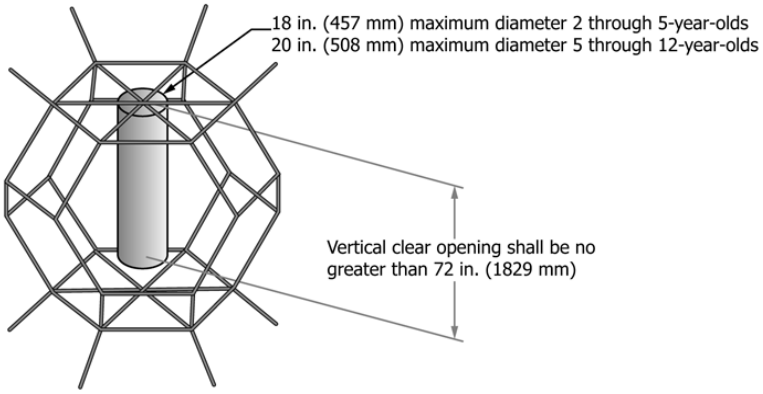 (2) Fail **FIG. A1.54 Climbing Net Clear Opening Reference Paragraph 8.2.5.1**		P
	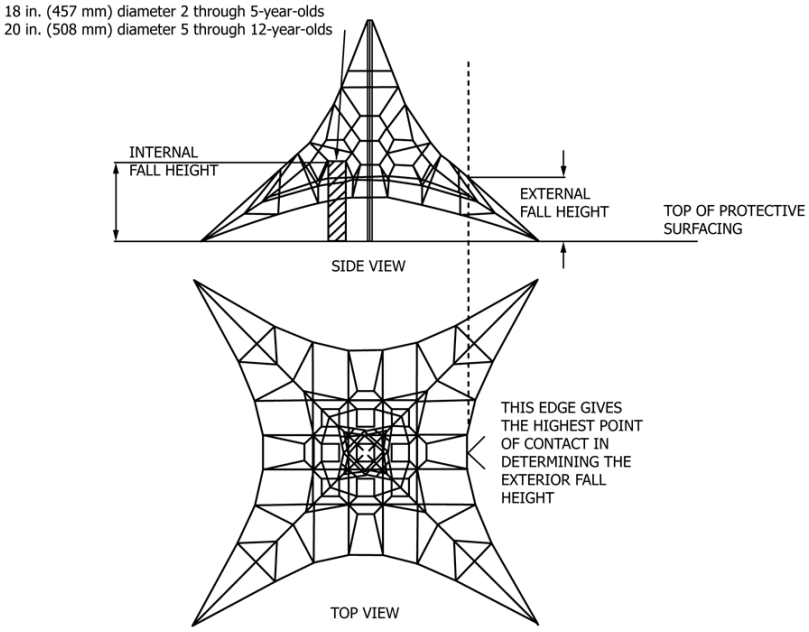 **FIG. A1.55 Fall Heights for 3-Dimensional Matrix Nets Reference Paragraph 8.2.5.2 (1) and (2)**		P

Clause	Requirement + Test	Result - Remark	Verdict
	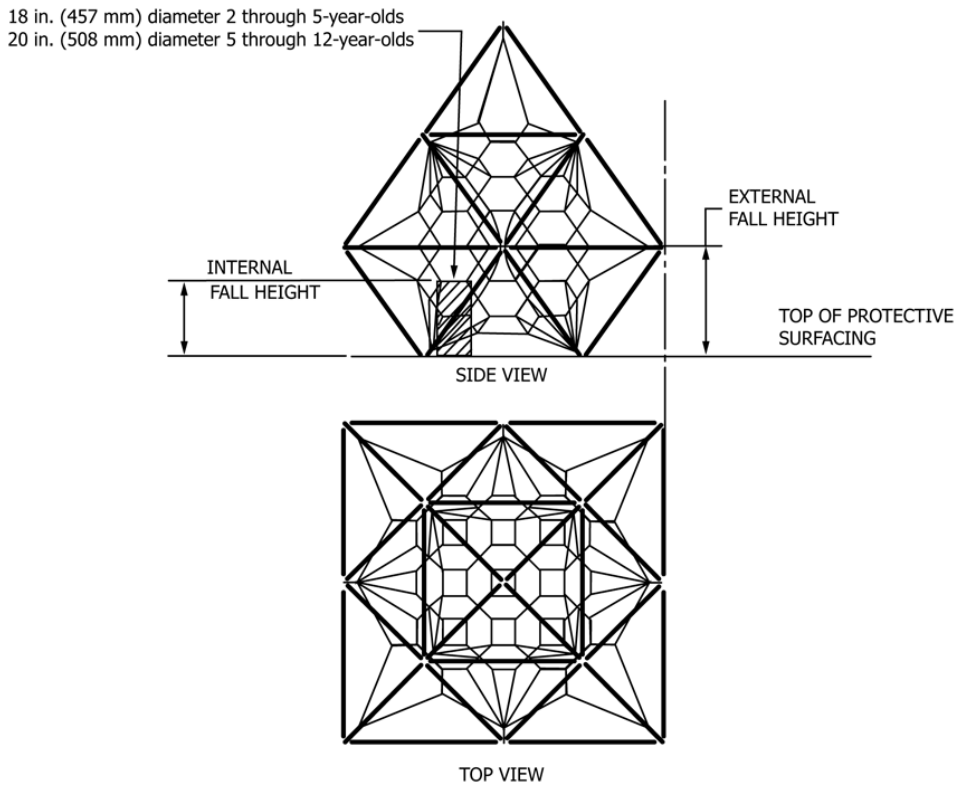 **FIG. A1.56 Fall Heights for 3-Dimensional Matrix Nets Reference Paragraph 8.2.5.2 (1) and (2)**		P
	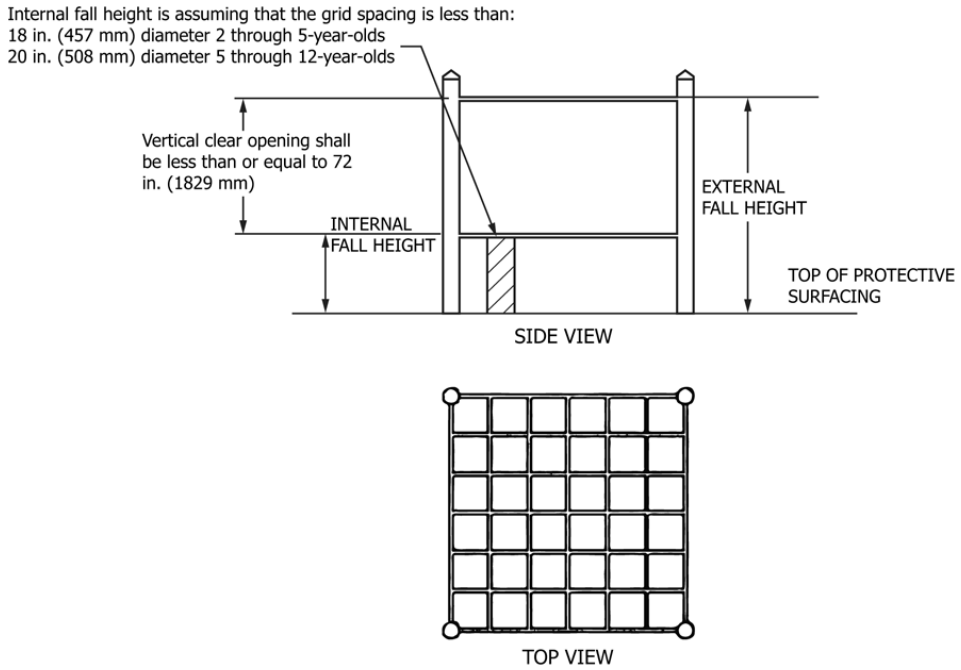 **FIG. A1.57 Fall Heights for 3-Dimensional Matrix Nets Reference Paragraph 8.2.5.2 (1) and (2)**		P

Clause	Requirement + Test	Result - Remark	Verdict
	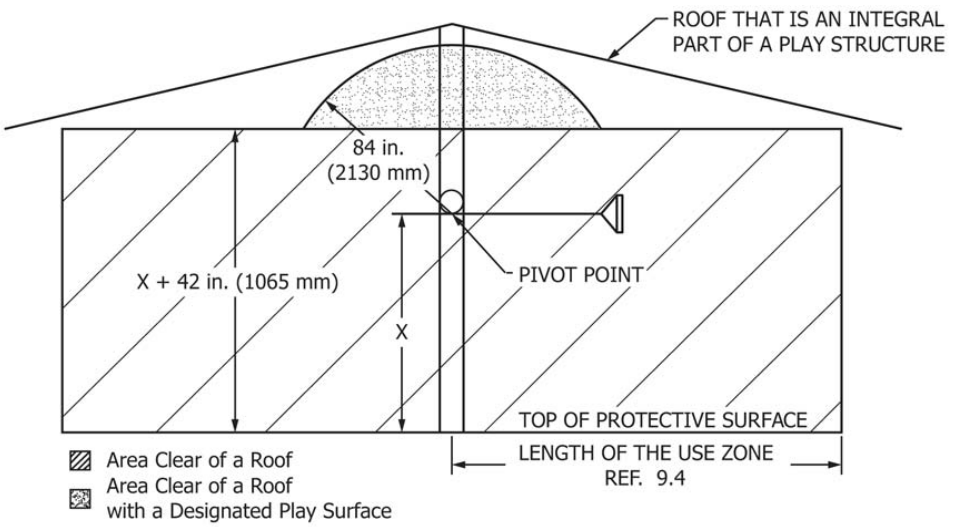 **FIG. A1.58 Swing Overhead Obstructions Reference Paragraphs 8.14.1, 8.14.3, and 9.8.4.1** 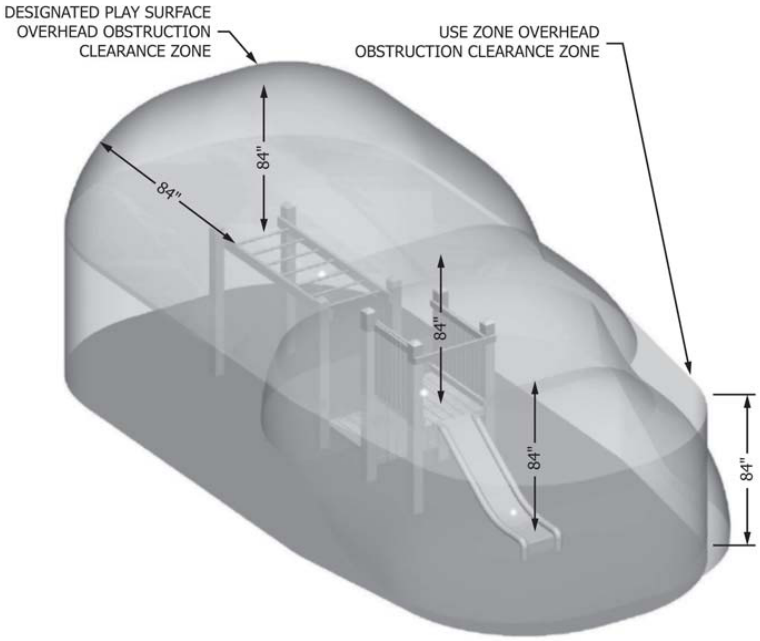 **FIG. A1.58 Overhead Obstructions Reference Paragraphs 8.14.1, 8.14.3, and 9.8.4.1**		N/A

Clause	Requirement + Test	Result - Remark	Verdict
	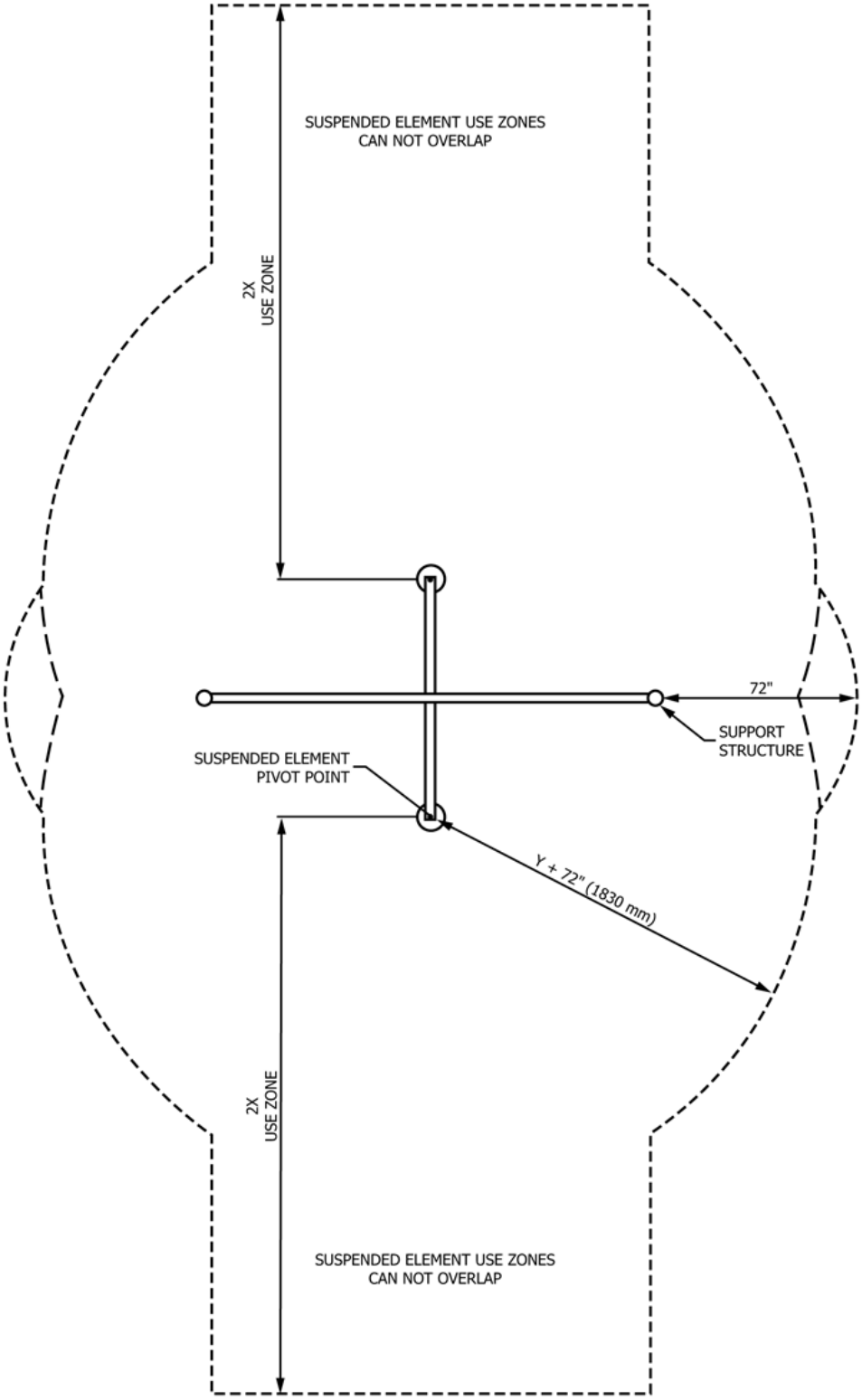 NOTE: X = THE VERTICAL DISTANCE FROM THE PROTECTIVE SURFACE TO THE HIGHEST ATTAINABLE PIVOT POINT OF THE SUSPENDED ELEMENT DURING USE. Y = THE VERTICAL DISTANCE FROM THE TOP OF THE SITTING SURFACE TO THE PIVOT POINT. **FIG. A1.59 Reference Paragraph 9.4.3**		N/A

Clause	Requirement + Test	Result - Remark	Verdict
	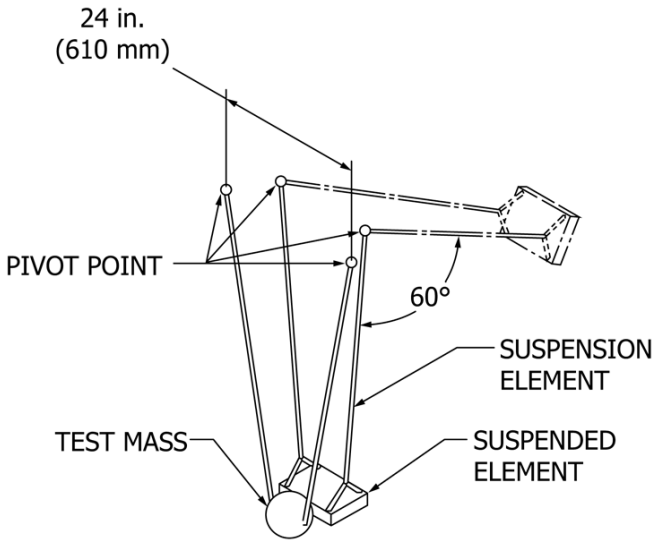 **FIG. A1.60 Swing Impact Test Device Arrangement Reference Paragraphs 8.6.7.2(1) and 8.6.7.3(3)(a)**		P
	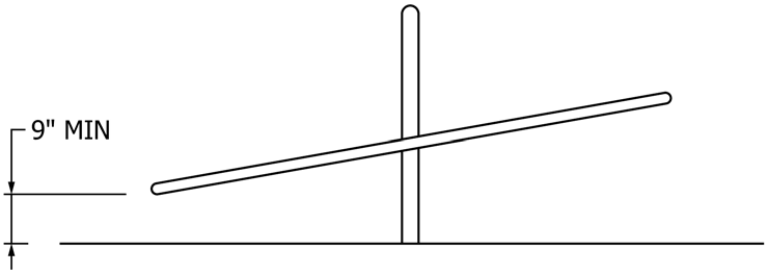 **FIG. A1.61 Clearance for Rotating Equipment with a Reducing Plane of Motion Reference Paragraph 8.8.1.8**		N/A

Clause	Requirement + Test	Result - Remark	Verdict
	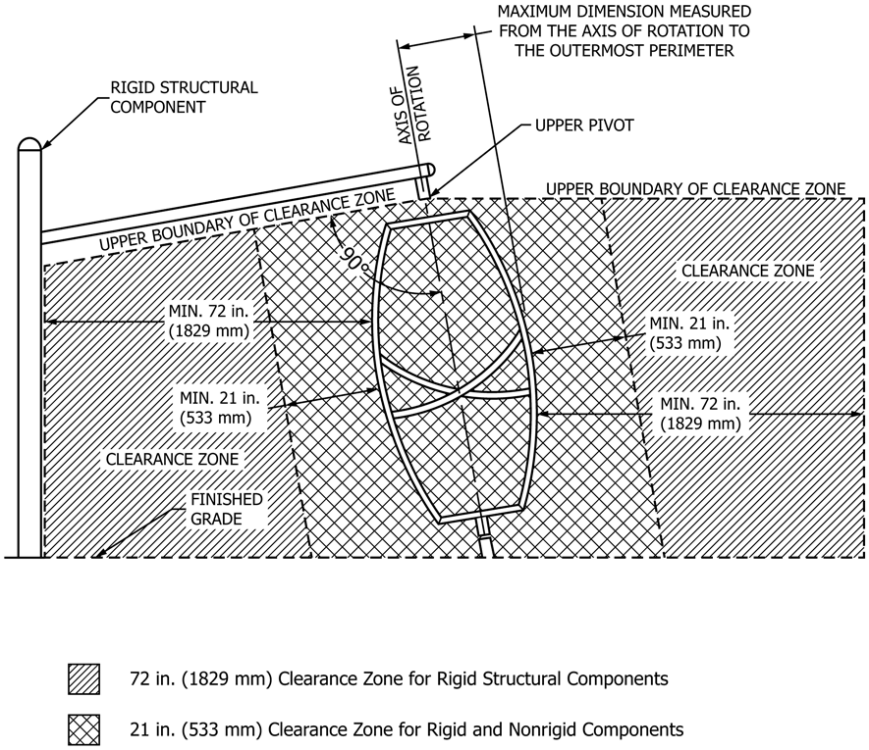 **FIG. A1.62 Clearance Zone for Rotating Equipment Reference Paragraph 8.8.1.10**		N/A
	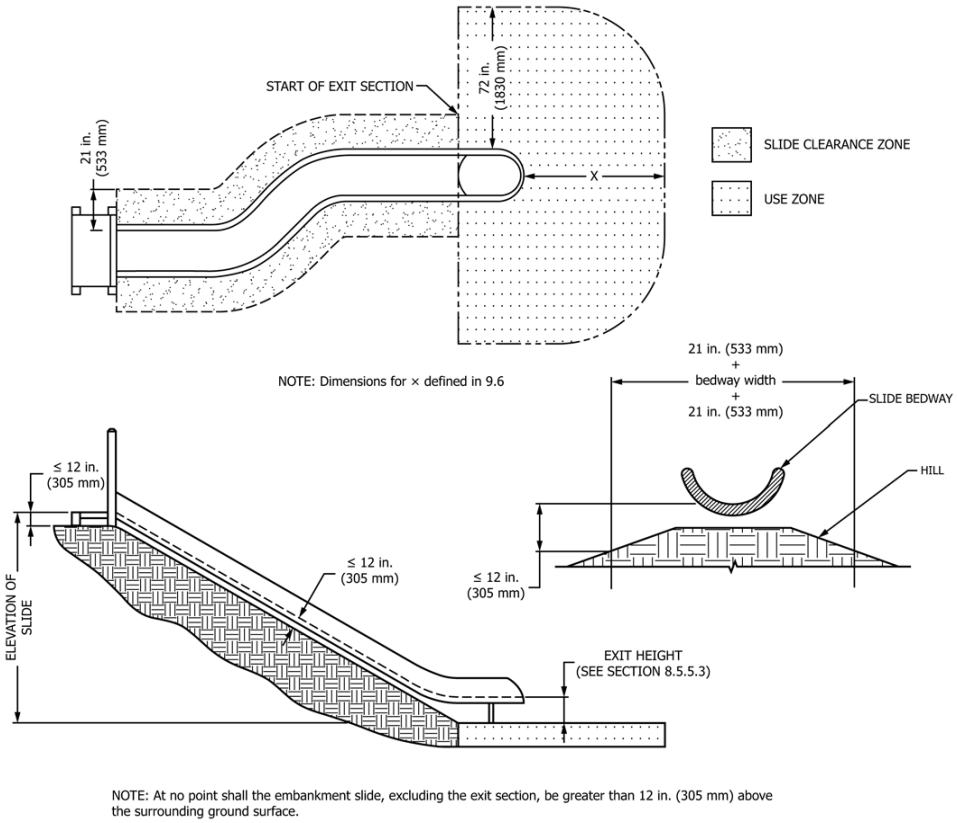 **FIG. A1.63 Embankment Slide Reference Paragraphs 3.1.11, 8.5.8.1, and 9.6.4.4**		P

	Requirement test	Result remarks	Verdict
Yellow pearl wool	Flammability	1.2mm/s	P
White pearl wool	Flammability	1.2mm/s	P
Ecru pearl wool	Flammability	1.1mm/s	P
Grey pearl wool	Flammability	1.2mm/s	P
Green pearl wool	Flammability	1.2mm/s	P
Orange pearl wool	Flammability	1.1mm/s	P
Purple pearl wool	Flammability	1.2mm/s	P
Plywood	Flammability	1.3mm/s	P
Transparent plastic board	Flammability	1.2mm/s	P
White tie	Flammability	1.0mm/s	P
Ecru tie	Flammability	1.0mm/s	P
Yellow tie	Flammability	1.0mm/s	P
Grey tie	Flammability	1.0mm/s	P
White net	Flammability	1.3mm/s	P
Black net	Flammability	1.4mm/s	P
Grey net	Flammability	1.3mm/s	P
Ecru net	Flammability	1.3mm/s	P
Green plastic sheeting	Flammability	1.3mm/s	P
Pink plastic sheeting	Flammability	1.4mm/s	P
Blue plastic sheeting	Flammability	1.4mm/s	P
Yellow plastic sheeting	Flammability	1.3mm/s	P
Purple plastic sheeting	Flammability	1.3mm/s	P
Aqua plastic sheeting	Flammability	1.3mm/s	P
Orange plastic sheeting	Flammability	1.3mm/s	P
White plastic sheeting	Flammability	1.4mm/s	P
Ecru plastic sheeting	Flammability	1.3mm/s	P
Light blue plastic sheeting	Flammability	1.3mm/s	P
Multicolour sheeting	Flammability	1.4mm/s	P
Blue plastic	Flammability	1.4mm/s	P
Light blue plastic	Flammability	1.5mm/s	P
Green plastic	Flammability	1.4mm/s	P
Yellow plastic	Flammability	1.4mm/s	P
White plastic	Flammability	1.5mm/s	P
Purple plastic	Flammability	1.4mm/s	P
Pink plastic	Flammability	1.4mm/s	P
White plastic	Flammability	1.4mm/s	P
Rope	Flammability	1.2mm/s	P
Rope A	Flammability	1.2mm/s	P
Cloth	Flammability	1.7mm/s	P
White ball	Flammability	1.3mm/s	P
Purple ball	Flammability	1.3mm/s	P
Blue ball	Flammability	1.4mm/s	P
Red ball	Flammability	1.3mm/s	P
Green ball	Flammability	1.3mm/s	P
Transparent ball	Flammability	1.4mm/s	P
Yellow ball	Flammability	1.3mm/s	P
White plastic granule	Flammability	1.4mm/s	P

Yellow pearl wool					
Test Item	Unit	Test Method	Result	Limit	Verdict
Antimony, (Sb)	mg/kg	F963 – 17	N.D.	60	Pass
Arsenic, (As)	mg/kg	F963 – 17	N.D.	25	Pass
Barium, (Ba)	mg/kg	F963 – 17	N.D.	1000	Pass
Cadmium, (Cd)	mg/kg	F963 – 17	N.D.	75	Pass
Chromium, (Cr)	mg/kg	F963 – 17	N.D.	60	Pass

Lead, (Pb)	mg/kg	F963 – 17	N.D.	90	Pass
Mercury, (Hg)	mg/kg	F963 – 17	N.D.	60	Pass
Selenium, (Se)	mg/kg	F963 – 17	N.D.	500	Pass

White pearl wool					
Test Item	Unit	Test Method	Result	Limit	Verdict
Antimony, (Sb)	mg/kg	F963 – 17	N.D.	60	Pass
Arsenic, (As)	mg/kg	F963 – 17	N.D.	25	Pass
Barium, (Ba)	mg/kg	F963 – 17	N.D.	1000	Pass
Cadmium, (Cd)	mg/kg	F963 – 17	N.D.	75	Pass
Chromium, (Cr)	mg/kg	F963 – 17	N.D.	60	Pass
Lead, (Pb)	mg/kg	F963 – 17	N.D.	90	Pass
Mercury, (Hg)	mg/kg	F963 – 17	N.D.	60	Pass
Selenium, (Se)	mg/kg	F963 – 17	N.D.	500	Pass

Ecru pearl wool					
Test Item	Unit	Test Method	Result	Limit	Verdict
Antimony, (Sb)	mg/kg	F963 – 17	N.D.	45	Pass
Arsenic, (As)	mg/kg	F963 – 17	N.D.	3.8	Pass
Barium, (Ba)	mg/kg	F963 – 17	N.D.	1 500	Pass
Cadmium, (Cd)	mg/kg	F963 – 17	N.D.	1.3	Pass
Chromium, (Cr)	mg/kg	F963 – 17	N.D.	37.5	Pass
Lead, (Pb)	mg/kg	F963 – 17	N.D.	13.5	Pass
Mercury, (Hg)	mg/kg	F963 – 17	N.D.	7.5	Pass
Selenium, (Se)	mg/kg	F963 – 17	N.D.	37.5	Pass

Grey pearl wool					
Test Item	Unit	Test Method	Result	Limit	Verdict
Antimony, (Sb)	mg/kg	F963 – 17	N.D.	60	Pass
Arsenic, (As)	mg/kg	F963 – 17	N.D.	25	Pass
Barium, (Ba)	mg/kg	F963 – 17	N.D.	1000	Pass
Cadmium, (Cd)	mg/kg	F963 – 17	N.D.	75	Pass
Chromium, (Cr)	mg/kg	F963 – 17	N.D.	60	Pass
Lead, (Pb)	mg/kg	F963 – 17	N.D.	90	Pass
Mercury, (Hg)	mg/kg	F963 – 17	N.D.	60	Pass
Selenium, (Se)	mg/kg	F963 – 17	N.D.	500	Pass

Green pearl wool					
Test Item	Unit	Test Method	Result	Limit	Verdict
Antimony, (Sb)	mg/kg	F963 – 17	N.D.	60	Pass
Arsenic, (As)	mg/kg	F963 – 17	N.D.	25	Pass
Barium, (Ba)	mg/kg	F963 – 17	N.D.	1000	Pass
Cadmium, (Cd)	mg/kg	F963 – 17	N.D.	75	Pass
Chromium, (Cr)	mg/kg	F963 – 17	N.D.	60	Pass
Lead, (Pb)	mg/kg	F963 – 17	N.D.	90	Pass
Mercury, (Hg)	mg/kg	F963 – 17	N.D.	60	Pass
Selenium, (Se)	mg/kg	F963 – 17	N.D.	500	Pass

Orange pearl wool					
Test Item	Unit	Test Method	Result	Limit	Verdict
Antimony, (Sb)	mg/kg	F963 – 17	N.D.	60	Pass
Arsenic, (As)	mg/kg	F963 – 17	N.D.	25	Pass
Barium, (Ba)	mg/kg	F963 – 17	N.D.	1000	Pass
Cadmium, (Cd)	mg/kg	F963 – 17	N.D.	75	Pass
Chromium, (Cr)	mg/kg	F963 – 17	N.D.	60	Pass
Lead, (Pb)	mg/kg	F963 – 17	N.D.	90	Pass
Mercury, (Hg)	mg/kg	F963 – 17	N.D.	60	Pass

Selenium, (Se)	mg/kg	F963 – 17	N.D.	500	Pass

Purple pearl wool					
Test Item	Unit	Test Method	Result	Limit	Verdict
Antimony, (Sb)	mg/kg	F963 – 17	N.D.	60	Pass
Arsenic, (As)	mg/kg	F963 – 17	N.D.	25	Pass
Barium, (Ba)	mg/kg	F963 – 17	N.D.	1000	Pass
Cadmium, (Cd)	mg/kg	F963 – 17	N.D.	75	Pass
Chromium, (Cr)	mg/kg	F963 – 17	N.D.	60	Pass
Lead, (Pb)	mg/kg	F963 – 17	N.D.	90	Pass
Mercury, (Hg)	mg/kg	F963 – 17	N.D.	60	Pass
Selenium, (Se)	mg/kg	F963 – 17	N.D.	500	Pass

Plywood					
Test Item	Unit	Test Method	Result	Limit	Verdict
Antimony, (Sb)	mg/kg	F963 – 17	N.D.	60	Pass
Arsenic, (As)	mg/kg	F963 – 17	N.D.	25	Pass
Barium, (Ba)	mg/kg	F963 – 17	N.D.	1000	Pass
Cadmium, (Cd)	mg/kg	F963 – 17	N.D.	75	Pass
Chromium, (Cr)	mg/kg	F963 – 17	N.D.	60	Pass
Lead, (Pb)	mg/kg	F963 – 17	N.D.	90	Pass
Mercury, (Hg)	mg/kg	F963 – 17	N.D.	60	Pass
Selenium, (Se)	mg/kg	F963 – 17	N.D.	500	Pass

Transparent plastic board					
Test Item	Unit	Test Method	Result	Limit	Verdict
Antimony, (Sb)	mg/kg	F963 – 17	N.D.	60	Pass
Arsenic, (As)	mg/kg	F963 – 17	N.D.	25	Pass
Barium, (Ba)	mg/kg	F963 – 17	N.D.	1000	Pass
Cadmium, (Cd)	mg/kg	F963 – 17	N.D.	75	Pass
Chromium, (Cr)	mg/kg	F963 – 17	N.D.	60	Pass
Lead, (Pb)	mg/kg	F963 – 17	N.D.	90	Pass
Mercury, (Hg)	mg/kg	F963 – 17	N.D.	60	Pass
Selenium, (Se)	mg/kg	F963 – 17	N.D.	500	Pass

White tie					
Test Item	Unit	Test Method	Result	Limit	Verdict
Antimony, (Sb)	mg/kg	F963 – 17	N.D.	60	Pass
Arsenic, (As)	mg/kg	F963 – 17	N.D.	25	Pass
Barium, (Ba)	mg/kg	F963 – 17	N.D.	1000	Pass
Cadmium, (Cd)	mg/kg	F963 – 17	N.D.	75	Pass
Chromium, (Cr)	mg/kg	F963 – 17	N.D.	60	Pass
Lead, (Pb)	mg/kg	F963 – 17	N.D.	90	Pass
Mercury, (Hg)	mg/kg	F963 – 17	N.D.	60	Pass
Selenium, (Se)	mg/kg	F963 – 17	N.D.	500	Pass

Ecru tie					
Test Item	Unit	Test Method	Result	Limit	Verdict
Antimony, (Sb)	mg/kg	F963 – 17	N.D.	60	Pass
Arsenic, (As)	mg/kg	F963 – 17	N.D.	25	Pass
Barium, (Ba)	mg/kg	F963 – 17	N.D.	1000	Pass
Cadmium, (Cd)	mg/kg	F963 – 17	N.D.	75	Pass
Chromium, (Cr)	mg/kg	F963 – 17	N.D.	60	Pass
Lead, (Pb)	mg/kg	F963 – 17	N.D.	90	Pass
Mercury, (Hg)	mg/kg	F963 – 17	N.D.	60	Pass
Selenium, (Se)	mg/kg	F963 – 17	N.D.	500	Pass

Yellow tie					
Test Item	Unit	Test Method	Result	Limit	Verdict
Antimony, (Sb)	mg/kg	F963 – 17	N.D.	60	Pass
Arsenic, (As)	mg/kg	F963 – 17	N.D.	25	Pass
Barium, (Ba)	mg/kg	F963 – 17	N.D.	1000	Pass
Cadmium, (Cd)	mg/kg	F963 – 17	N.D.	75	Pass
Chromium, (Cr)	mg/kg	F963 – 17	N.D.	60	Pass
Lead, (Pb)	mg/kg	F963 – 17	N.D.	90	Pass
Mercury, (Hg)	mg/kg	F963 – 17	N.D.	60	Pass
Selenium, (Se)	mg/kg	F963 – 17	N.D.	500	Pass

Grey tie					
Test Item	Unit	Test Method	Result	Limit	Verdict
Antimony, (Sb)	mg/kg	F963 – 17	N.D.	60	Pass
Arsenic, (As)	mg/kg	F963 – 17	N.D.	25	Pass
Barium, (Ba)	mg/kg	F963 – 17	N.D.	1000	Pass
Cadmium, (Cd)	mg/kg	F963 – 17	N.D.	75	Pass
Chromium, (Cr)	mg/kg	F963 – 17	N.D.	60	Pass
Lead, (Pb)	mg/kg	F963 – 17	N.D.	90	Pass
Mercury, (Hg)	mg/kg	F963 – 17	N.D.	60	Pass
Selenium, (Se)	mg/kg	F963 – 17	N.D.	500	Pass

White net					
Test Item	Unit	Test Method	Result	Limit	Verdict
Antimony, (Sb)	mg/kg	F963 – 17	N.D.	60	Pass
Arsenic, (As)	mg/kg	F963 – 17	N.D.	25	Pass
Barium, (Ba)	mg/kg	F963 – 17	N.D.	1000	Pass
Cadmium, (Cd)	mg/kg	F963 – 17	N.D.	75	Pass
Chromium, (Cr)	mg/kg	F963 – 17	N.D.	60	Pass
Lead, (Pb)	mg/kg	F963 – 17	N.D.	90	Pass
Mercury, (Hg)	mg/kg	F963 – 17	N.D.	60	Pass
Selenium, (Se)	mg/kg	F963 – 17	N.D.	500	Pass

Black net					
Test Item	Unit	Test Method	Result	Limit	Verdict
Antimony, (Sb)	mg/kg	F963 – 17	N.D.	60	Pass
Arsenic, (As)	mg/kg	F963 – 17	N.D.	25	Pass
Barium, (Ba)	mg/kg	F963 – 17	N.D.	1000	Pass
Cadmium, (Cd)	mg/kg	F963 – 17	N.D.	75	Pass
Chromium, (Cr)	mg/kg	F963 – 17	N.D.	60	Pass
Lead, (Pb)	mg/kg	F963 – 17	N.D.	90	Pass
Mercury, (Hg)	mg/kg	F963 – 17	N.D.	60	Pass
Selenium, (Se)	mg/kg	F963 – 17	N.D.	500	Pass

Grey net					
Test Item	Unit	Test Method	Result	Limit	Verdict
Antimony, (Sb)	mg/kg	F963 – 17	N.D.	60	Pass
Arsenic, (As)	mg/kg	F963 – 17	N.D.	25	Pass
Barium, (Ba)	mg/kg	F963 – 17	N.D.	1000	Pass
Cadmium, (Cd)	mg/kg	F963 – 17	N.D.	75	Pass
Chromium, (Cr)	mg/kg	F963 – 17	N.D.	60	Pass
Lead, (Pb)	mg/kg	F963 – 17	N.D.	90	Pass
Mercury, (Hg)	mg/kg	F963 – 17	N.D.	60	Pass
Selenium, (Se)	mg/kg	F963 – 17	N.D.	500	Pass

Ecru net					
Test Item	Unit	Test Method	Result	Limit	Verdict

Antimony, (Sb)	mg/kg	F963 – 17	N.D.	60	Pass
Arsenic, (As)	mg/kg	F963 – 17	N.D.	25	Pass
Barium, (Ba)	mg/kg	F963 – 17	N.D.	1000	Pass
Cadmium, (Cd)	mg/kg	F963 – 17	N.D.	75	Pass
Chromium, (Cr)	mg/kg	F963 – 17	N.D.	60	Pass
Lead, (Pb)	mg/kg	F963 – 17	N.D.	90	Pass
Mercury, (Hg)	mg/kg	F963 – 17	N.D.	60	Pass
Selenium, (Se)	mg/kg	F963 – 17	N.D.	500	Pass

Green plastic sheeting					
Test Item	Unit	Test Method	Result	Limit	Verdict
Antimony, (Sb)	mg/kg	F963 – 17	N.D.	60	Pass
Arsenic, (As)	mg/kg	F963 – 17	N.D.	25	Pass
Barium, (Ba)	mg/kg	F963 – 17	N.D.	1000	Pass
Cadmium, (Cd)	mg/kg	F963 – 17	N.D.	75	Pass
Chromium, (Cr)	mg/kg	F963 – 17	N.D.	60	Pass
Lead, (Pb)	mg/kg	F963 – 17	N.D.	90	Pass
Mercury, (Hg)	mg/kg	F963 – 17	N.D.	60	Pass
Selenium, (Se)	mg/kg	F963 – 17	N.D.	500	Pass

Pink plastic sheeting					
Test Item	Unit	Test Method	Result	Limit	Verdict
Antimony, (Sb)	mg/kg	F963 – 17	N.D.	60	Pass
Arsenic, (As)	mg/kg	F963 – 17	N.D.	25	Pass
Barium, (Ba)	mg/kg	F963 – 17	N.D.	1000	Pass
Cadmium, (Cd)	mg/kg	F963 – 17	N.D.	75	Pass
Chromium, (Cr)	mg/kg	F963 – 17	N.D.	60	Pass
Lead, (Pb)	mg/kg	F963 – 17	N.D.	90	Pass
Mercury, (Hg)	mg/kg	F963 – 17	N.D.	60	Pass
Selenium, (Se)	mg/kg	F963 – 17	N.D.	500	Pass

Blue plastic sheeting					
Test Item	Unit	Test Method	Result	Limit	Verdict
Antimony, (Sb)	mg/kg	F963 – 17	N.D.	60	Pass
Arsenic, (As)	mg/kg	F963 – 17	N.D.	25	Pass
Barium, (Ba)	mg/kg	F963 – 17	N.D.	1000	Pass
Cadmium, (Cd)	mg/kg	F963 – 17	N.D.	75	Pass
Chromium, (Cr)	mg/kg	F963 – 17	N.D.	60	Pass
Lead, (Pb)	mg/kg	F963 – 17	N.D.	90	Pass
Mercury, (Hg)	mg/kg	F963 – 17	N.D.	60	Pass
Selenium, (Se)	mg/kg	F963 – 17	N.D.	500	Pass

Yellow plastic sheeting					
Test Item	Unit	Test Method	Result	Limit	Verdict
Antimony, (Sb)	mg/kg	F963 – 17	N.D.	60	Pass
Arsenic, (As)	mg/kg	F963 – 17	N.D.	25	Pass
Barium, (Ba)	mg/kg	F963 – 17	N.D.	1000	Pass
Cadmium, (Cd)	mg/kg	F963 – 17	N.D.	75	Pass
Chromium, (Cr)	mg/kg	F963 – 17	N.D.	60	Pass
Lead, (Pb)	mg/kg	F963 – 17	N.D.	90	Pass
Mercury, (Hg)	mg/kg	F963 – 17	N.D.	60	Pass
Selenium, (Se)	mg/kg	F963 – 17	N.D.	500	Pass

Purple plastic sheeting					
Test Item	Unit	Test Method	Result	Limit	Verdict
Antimony, (Sb)	mg/kg	F963 – 17	N.D.	60	Pass
Arsenic, (As)	mg/kg	F963 – 17	N.D.	25	Pass

Barium, (Ba)	mg/kg	F963 – 17	N.D.	1000	Pass
Cadmium, (Cd)	mg/kg	F963 – 17	N.D.	75	Pass
Chromium, (Cr)	mg/kg	F963 – 17	N.D.	60	Pass
Lead, (Pb)	mg/kg	F963 – 17	N.D.	90	Pass
Mercury, (Hg)	mg/kg	F963 – 17	N.D.	60	Pass
Selenium, (Se)	mg/kg	F963 – 17	N.D.	500	Pass

Aqua plastic sheeting					
Test Item	Unit	Test Method	Result	Limit	Verdict
Antimony, (Sb)	mg/kg	F963 – 17	N.D.	60	Pass
Arsenic, (As)	mg/kg	F963 – 17	N.D.	25	Pass
Barium, (Ba)	mg/kg	F963 – 17	N.D.	1000	Pass
Cadmium, (Cd)	mg/kg	F963 – 17	N.D.	75	Pass
Chromium, (Cr)	mg/kg	F963 – 17	N.D.	60	Pass
Lead, (Pb)	mg/kg	F963 – 17	N.D.	90	Pass
Mercury, (Hg)	mg/kg	F963 – 17	N.D.	60	Pass
Selenium, (Se)	mg/kg	F963 – 17	N.D.	500	Pass

Orange plastic sheeting					
Test Item	Unit	Test Method	Result	Limit	Verdict
Antimony, (Sb)	mg/kg	F963 – 17	N.D.	60	Pass
Arsenic, (As)	mg/kg	F963 – 17	N.D.	25	Pass
Barium, (Ba)	mg/kg	F963 – 17	N.D.	1000	Pass
Cadmium, (Cd)	mg/kg	F963 – 17	N.D.	75	Pass
Chromium, (Cr)	mg/kg	F963 – 17	N.D.	60	Pass
Lead, (Pb)	mg/kg	F963 – 17	N.D.	90	Pass
Mercury, (Hg)	mg/kg	F963 – 17	N.D.	60	Pass
Selenium, (Se)	mg/kg	F963 – 17	N.D.	500	Pass

White plastic sheeting					
Test Item	Unit	Test Method	Result	Limit	Verdict
Antimony, (Sb)	mg/kg	F963 – 17	N.D.	60	Pass
Arsenic, (As)	mg/kg	F963 – 17	N.D.	25	Pass
Barium, (Ba)	mg/kg	F963 – 17	N.D.	1000	Pass
Cadmium, (Cd)	mg/kg	F963 – 17	N.D.	75	Pass
Chromium, (Cr)	mg/kg	F963 – 17	N.D.	60	Pass
Lead, (Pb)	mg/kg	F963 – 17	N.D.	90	Pass
Mercury, (Hg)	mg/kg	F963 – 17	N.D.	60	Pass
Selenium, (Se)	mg/kg	F963 – 17	N.D.	500	Pass

Ecru plastic sheeting					
Test Item	Unit	Test Method	Result	Limit	Verdict
Antimony, (Sb)	mg/kg	F963 – 17	N.D.	60	Pass
Arsenic, (As)	mg/kg	F963 – 17	N.D.	25	Pass
Barium, (Ba)	mg/kg	F963 – 17	N.D.	1000	Pass
Cadmium, (Cd)	mg/kg	F963 – 17	N.D.	75	Pass
Chromium, (Cr)	mg/kg	F963 – 17	N.D.	60	Pass
Lead, (Pb)	mg/kg	F963 – 17	N.D.	90	Pass
Mercury, (Hg)	mg/kg	F963 – 17	N.D.	60	Pass
Selenium, (Se)	mg/kg	F963 – 17	N.D.	500	Pass

Light blue plastic sheeting					
Test Item	Unit	Test Method	Result	Limit	Verdict
Antimony, (Sb)	mg/kg	F963 – 17	N.D.	60	Pass
Arsenic, (As)	mg/kg	F963 – 17	N.D.	25	Pass
Barium, (Ba)	mg/kg	F963 – 17	N.D.	1000	Pass
Cadmium, (Cd)	mg/kg	F963 – 17	N.D.	75	Pass

Chromium, (Cr)	mg/kg	F963 – 17	N.D.	60	Pass
Lead, (Pb)	mg/kg	F963 – 17	N.D.	90	Pass
Mercury, (Hg)	mg/kg	F963 – 17	N.D.	60	Pass
Selenium, (Se)	mg/kg	F963 – 17	N.D.	500	Pass

Multicolour sheeting					
Test Item	Unit	Test Method	Result	Limit	Verdict
Antimony, (Sb)	mg/kg	F963 – 17	N.D.	60	Pass
Arsenic, (As)	mg/kg	F963 – 17	N.D.	25	Pass
Barium, (Ba)	mg/kg	F963 – 17	N.D.	1000	Pass
Cadmium, (Cd)	mg/kg	F963 – 17	N.D.	75	Pass
Chromium, (Cr)	mg/kg	F963 – 17	N.D.	60	Pass
Lead, (Pb)	mg/kg	F963 – 17	N.D.	90	Pass
Mercury, (Hg)	mg/kg	F963 – 17	N.D.	60	Pass
Selenium, (Se)	mg/kg	F963 – 17	N.D.	500	Pass

Blue plastic					
Test Item	Unit	Test Method	Result	Limit	Verdict
Antimony, (Sb)	mg/kg	F963 – 17	N.D.	60	Pass
Arsenic, (As)	mg/kg	F963 – 17	N.D.	25	Pass
Barium, (Ba)	mg/kg	F963 – 17	N.D.	1000	Pass
Cadmium, (Cd)	mg/kg	F963 – 17	N.D.	75	Pass
Chromium, (Cr)	mg/kg	F963 – 17	N.D.	60	Pass
Lead, (Pb)	mg/kg	F963 – 17	N.D.	90	Pass
Mercury, (Hg)	mg/kg	F963 – 17	N.D.	60	Pass
Selenium, (Se)	mg/kg	F963 – 17	N.D.	500	Pass

Light blue plastic					
Test Item	Unit	Test Method	Result	Limit	Verdict
Antimony, (Sb)	mg/kg	F963 – 17	N.D.	60	Pass
Arsenic, (As)	mg/kg	F963 – 17	N.D.	25	Pass
Barium, (Ba)	mg/kg	F963 – 17	N.D.	1000	Pass
Cadmium, (Cd)	mg/kg	F963 – 17	N.D.	75	Pass
Chromium, (Cr)	mg/kg	F963 – 17	N.D.	60	Pass
Lead, (Pb)	mg/kg	F963 – 17	N.D.	90	Pass
Mercury, (Hg)	mg/kg	F963 – 17	N.D.	60	Pass
Selenium, (Se)	mg/kg	F963 – 17	N.D.	500	Pass

Green plastic					
Test Item	Unit	Test Method	Result	Limit	Verdict
Antimony, (Sb)	mg/kg	F963 – 17	N.D.	60	Pass
Arsenic, (As)	mg/kg	F963 – 17	N.D.	25	Pass
Barium, (Ba)	mg/kg	F963 – 17	N.D.	1000	Pass
Cadmium, (Cd)	mg/kg	F963 – 17	N.D.	75	Pass
Chromium, (Cr)	mg/kg	F963 – 17	N.D.	60	Pass
Lead, (Pb)	mg/kg	F963 – 17	N.D.	90	Pass
Mercury, (Hg)	mg/kg	F963 – 17	N.D.	60	Pass
Selenium, (Se)	mg/kg	F963 – 17	N.D.	500	Pass

Yellow plastic					
Test Item	Unit	Test Method	Result	Limit	Verdict
Antimony, (Sb)	mg/kg	F963 – 17	N.D.	60	Pass
Arsenic, (As)	mg/kg	F963 – 17	N.D.	25	Pass
Barium, (Ba)	mg/kg	F963 – 17	N.D.	1000	Pass
Cadmium, (Cd)	mg/kg	F963 – 17	N.D.	75	Pass
Chromium, (Cr)	mg/kg	F963 – 17	N.D.	60	Pass
Lead, (Pb)	mg/kg	F963 – 17	N.D.	90	Pass

Mercury, (Hg)	mg/kg	F963 – 17	N.D.	60	Pass
Selenium, (Se)	mg/kg	F963 – 17	N.D.	500	Pass

White plastic					
Test Item	Unit	Test Method	Result	Limit	Verdict
Antimony, (Sb)	mg/kg	F963 – 17	N.D.	60	Pass
Arsenic, (As)	mg/kg	F963 – 17	N.D.	25	Pass
Barium, (Ba)	mg/kg	F963 – 17	N.D.	1000	Pass
Cadmium, (Cd)	mg/kg	F963 – 17	N.D.	75	Pass
Chromium, (Cr)	mg/kg	F963 – 17	N.D.	60	Pass
Lead, (Pb)	mg/kg	F963 – 17	N.D.	90	Pass
Mercury, (Hg)	mg/kg	F963 – 17	N.D.	60	Pass
Selenium, (Se)	mg/kg	F963 – 17	N.D.	500	Pass

Purple plastic					
Test Item	Unit	Test Method	Result	Limit	Verdict
Antimony, (Sb)	mg/kg	F963 – 17	N.D.	60	Pass
Arsenic, (As)	mg/kg	F963 – 17	N.D.	25	Pass
Barium, (Ba)	mg/kg	F963 – 17	N.D.	1000	Pass
Cadmium, (Cd)	mg/kg	F963 – 17	N.D.	75	Pass
Chromium, (Cr)	mg/kg	F963 – 17	N.D.	60	Pass
Lead, (Pb)	mg/kg	F963 – 17	N.D.	90	Pass
Mercury, (Hg)	mg/kg	F963 – 17	N.D.	60	Pass
Selenium, (Se)	mg/kg	F963 – 17	N.D.	500	Pass

Pink plastic					
Test Item	Unit	Test Method	Result	Limit	Verdict
Antimony, (Sb)	mg/kg	F963 – 17	N.D.	60	Pass
Arsenic, (As)	mg/kg	F963 – 17	N.D.	25	Pass
Barium, (Ba)	mg/kg	F963 – 17	N.D.	1000	Pass
Cadmium, (Cd)	mg/kg	F963 – 17	N.D.	75	Pass
Chromium, (Cr)	mg/kg	F963 – 17	N.D.	60	Pass
Lead, (Pb)	mg/kg	F963 – 17	N.D.	90	Pass
Mercury, (Hg)	mg/kg	F963 – 17	N.D.	60	Pass
Selenium, (Se)	mg/kg	F963 – 17	N.D.	500	Pass

White plastic					
Test Item	Unit	Test Method	Result	Limit	Verdict
Antimony, (Sb)	mg/kg	F963 – 17	N.D.	60	Pass
Arsenic, (As)	mg/kg	F963 – 17	N.D.	25	Pass
Barium, (Ba)	mg/kg	F963 – 17	N.D.	1000	Pass
Cadmium, (Cd)	mg/kg	F963 – 17	N.D.	75	Pass
Chromium, (Cr)	mg/kg	F963 – 17	N.D.	60	Pass
Lead, (Pb)	mg/kg	F963 – 17	N.D.	90	Pass
Mercury, (Hg)	mg/kg	F963 – 17	N.D.	60	Pass
Selenium, (Se)	mg/kg	F963 – 17	N.D.	500	Pass

Rope					
Test Item	Unit	Test Method	Result	Limit	Verdict
Antimony, (Sb)	mg/kg	F963 – 17	N.D.	60	Pass
Arsenic, (As)	mg/kg	F963 – 17	N.D.	25	Pass
Barium, (Ba)	mg/kg	F963 – 17	N.D.	1000	Pass
Cadmium, (Cd)	mg/kg	F963 – 17	N.D.	75	Pass
Chromium, (Cr)	mg/kg	F963 – 17	N.D.	60	Pass
Lead, (Pb)	mg/kg	F963 – 17	N.D.	90	Pass
Mercury, (Hg)	mg/kg	F963 – 17	N.D.	60	Pass
Selenium, (Se)	mg/kg	F963 – 17	N.D.	500	Pass

Rope A					
Test Item	Unit	Test Method	Result	Limit	Verdict
Antimony, (Sb)	mg/kg	F963 – 17	N.D.	60	Pass
Arsenic, (As)	mg/kg	F963 – 17	N.D.	25	Pass
Barium, (Ba)	mg/kg	F963 – 17	N.D.	1000	Pass
Cadmium, (Cd)	mg/kg	F963 – 17	N.D.	75	Pass
Chromium, (Cr)	mg/kg	F963 – 17	N.D.	60	Pass
Lead, (Pb)	mg/kg	F963 – 17	N.D.	90	Pass
Mercury, (Hg)	mg/kg	F963 – 17	N.D.	60	Pass
Selenium, (Se)	mg/kg	F963 – 17	N.D.	500	Pass

Cloth					
Test Item	Unit	Test Method	Result	Limit	Verdict
Antimony, (Sb)	mg/kg	F963 – 17	N.D.	60	Pass
Arsenic, (As)	mg/kg	F963 – 17	N.D.	25	Pass
Barium, (Ba)	mg/kg	F963 – 17	N.D.	1000	Pass
Cadmium, (Cd)	mg/kg	F963 – 17	N.D.	75	Pass
Chromium, (Cr)	mg/kg	F963 – 17	N.D.	60	Pass
Lead, (Pb)	mg/kg	F963 – 17	N.D.	90	Pass
Mercury, (Hg)	mg/kg	F963 – 17	N.D.	60	Pass
Selenium, (Se)	mg/kg	F963 – 17	N.D.	500	Pass

White ball					
Test Item	Unit	Test Method	Result	Limit	Verdict
Antimony, (Sb)	mg/kg	F963 – 17	N.D.	60	Pass
Arsenic, (As)	mg/kg	F963 – 17	N.D.	25	Pass
Barium, (Ba)	mg/kg	F963 – 17	N.D.	1000	Pass
Cadmium, (Cd)	mg/kg	F963 – 17	N.D.	75	Pass
Chromium, (Cr)	mg/kg	F963 – 17	N.D.	60	Pass
Lead, (Pb)	mg/kg	F963 – 17	N.D.	90	Pass
Mercury, (Hg)	mg/kg	F963 – 17	N.D.	60	Pass
Selenium, (Se)	mg/kg	F963 – 17	N.D.	500	Pass

Purple ball					
Test Item	Unit	Test Method	Result	Limit	Verdict
Antimony, (Sb)	mg/kg	F963 – 17	N.D.	60	Pass
Arsenic, (As)	mg/kg	F963 – 17	N.D.	25	Pass
Barium, (Ba)	mg/kg	F963 – 17	N.D.	1000	Pass
Cadmium, (Cd)	mg/kg	F963 – 17	N.D.	75	Pass
Chromium, (Cr)	mg/kg	F963 – 17	N.D.	60	Pass
Lead, (Pb)	mg/kg	F963 – 17	N.D.	90	Pass
Mercury, (Hg)	mg/kg	F963 – 17	N.D.	60	Pass
Selenium, (Se)	mg/kg	F963 – 17	N.D.	500	Pass

Blue ball					
Test Item	Unit	Test Method	Result	Limit	Verdict
Antimony, (Sb)	mg/kg	F963 – 17	N.D.	60	Pass
Arsenic, (As)	mg/kg	F963 – 17	N.D.	25	Pass
Barium, (Ba)	mg/kg	F963 – 17	N.D.	1000	Pass
Cadmium, (Cd)	mg/kg	F963 – 17	N.D.	75	Pass
Chromium, (Cr)	mg/kg	F963 – 17	N.D.	60	Pass
Lead, (Pb)	mg/kg	F963 – 17	N.D.	90	Pass
Mercury, (Hg)	mg/kg	F963 – 17	N.D.	60	Pass
Selenium, (Se)	mg/kg	F963 – 17	N.D.	500	Pass

Red ball

Test Item	Unit	Test Method	Result	Limit	Verdict
Antimony, (Sb)	mg/kg	F963 – 17	N.D.	60	Pass
Arsenic, (As)	mg/kg	F963 – 17	N.D.	25	Pass
Barium, (Ba)	mg/kg	F963 – 17	N.D.	1000	Pass
Cadmium, (Cd)	mg/kg	F963 – 17	N.D.	75	Pass
Chromium, (Cr)	mg/kg	F963 – 17	N.D.	60	Pass
Lead, (Pb)	mg/kg	F963 – 17	N.D.	90	Pass
Mercury, (Hg)	mg/kg	F963 – 17	N.D.	60	Pass
Selenium, (Se)	mg/kg	F963 – 17	N.D.	500	Pass

Green ball					
Test Item	Unit	Test Method	Result	Limit	Verdict
Antimony, (Sb)	mg/kg	F963 – 17	N.D.	60	Pass
Arsenic, (As)	mg/kg	F963 – 17	N.D.	25	Pass
Barium, (Ba)	mg/kg	F963 – 17	N.D.	1000	Pass
Cadmium, (Cd)	mg/kg	F963 – 17	N.D.	75	Pass
Chromium, (Cr)	mg/kg	F963 – 17	N.D.	60	Pass
Lead, (Pb)	mg/kg	F963 – 17	N.D.	90	Pass
Mercury, (Hg)	mg/kg	F963 – 17	N.D.	60	Pass
Selenium, (Se)	mg/kg	F963 – 17	N.D.	500	Pass

Transparent ball					
Test Item	Unit	Test Method	Result	Limit	Verdict
Antimony, (Sb)	mg/kg	F963 – 17	N.D.	60	Pass
Arsenic, (As)	mg/kg	F963 – 17	N.D.	25	Pass
Barium, (Ba)	mg/kg	F963 – 17	N.D.	1000	Pass
Cadmium, (Cd)	mg/kg	F963 – 17	N.D.	75	Pass
Chromium, (Cr)	mg/kg	F963 – 17	N.D.	60	Pass
Lead, (Pb)	mg/kg	F963 – 17	N.D.	90	Pass
Mercury, (Hg)	mg/kg	F963 – 17	N.D.	60	Pass
Selenium, (Se)	mg/kg	F963 – 17	N.D.	500	Pass

Yellow ball					
Test Item	Unit	Test Method	Result	Limit	Verdict
Antimony, (Sb)	mg/kg	F963 – 17	N.D.	60	Pass
Arsenic, (As)	mg/kg	F963 – 17	N.D.	25	Pass
Barium, (Ba)	mg/kg	F963 – 17	N.D.	1000	Pass
Cadmium, (Cd)	mg/kg	F963 – 17	N.D.	75	Pass
Chromium, (Cr)	mg/kg	F963 – 17	N.D.	60	Pass
Lead, (Pb)	mg/kg	F963 – 17	N.D.	90	Pass
Mercury, (Hg)	mg/kg	F963 – 17	N.D.	60	Pass
Selenium, (Se)	mg/kg	F963 – 17	N.D.	500	Pass

White plastic granule					
Test Item	Unit	Test Method	Result	Limit	Verdict
Antimony, (Sb)	mg/kg	F963 – 17	N.D.	60	Pass
Arsenic, (As)	mg/kg	F963 – 17	N.D.	25	Pass
Barium, (Ba)	mg/kg	F963 – 17	N.D.	1000	Pass
Cadmium, (Cd)	mg/kg	F963 – 17	N.D.	75	Pass
Chromium, (Cr)	mg/kg	F963 – 17	N.D.	60	Pass
Lead, (Pb)	mg/kg	F963 – 17	N.D.	90	Pass
Mercury, (Hg)	mg/kg	F963 – 17	N.D.	60	Pass
Selenium, (Se)	mg/kg	F963 – 17	N.D.	500	Pass

Connector					
Test Item	Unit	Test Method	Result	Limit	Verdict
Antimony, (Sb)	mg/kg	F963 – 17	N.D.	60	Pass

Arsenic, (As)	mg/kg	F963 – 17	N.D.	25	Pass
Barium, (Ba)	mg/kg	F963 – 17	N.D.	1000	Pass
Cadmium, (Cd)	mg/kg	F963 – 17	N.D.	75	Pass
Chromium, (Cr)	mg/kg	F963 – 17	N.D.	60	Pass
Lead, (Pb)	mg/kg	F963 – 17	N.D.	90	Pass
Mercury, (Hg)	mg/kg	F963 – 17	N.D.	60	Pass
Selenium, (Se)	mg/kg	F963 – 17	N.D.	500	Pass

Steel pipe					
Test Item	Unit	Test Method	Result	Limit	Verdict
Antimony, (Sb)	mg/kg	F963 – 17	N.D.	60	Pass
Arsenic, (As)	mg/kg	F963 – 17	N.D.	25	Pass
Barium, (Ba)	mg/kg	F963 – 17	N.D.	1000	Pass
Cadmium, (Cd)	mg/kg	F963 – 17	N.D.	75	Pass
Chromium, (Cr)	mg/kg	F963 – 17	N.D.	60	Pass
Lead, (Pb)	mg/kg	F963 – 17	N.D.	90	Pass
Mercury, (Hg)	mg/kg	F963 – 17	N.D.	60	Pass
Selenium, (Se)	mg/kg	F963 – 17	N.D.	500	Pass

Screw					
Test Item	Unit	Test Method	Result	Limit	Verdict
Antimony, (Sb)	mg/kg	F963 – 17	N.D.	60	Pass
Arsenic, (As)	mg/kg	F963 – 17	N.D.	25	Pass
Barium, (Ba)	mg/kg	F963 – 17	N.D.	1000	Pass
Cadmium, (Cd)	mg/kg	F963 – 17	N.D.	75	Pass
Chromium, (Cr)	mg/kg	F963 – 17	N.D.	60	Pass
Lead, (Pb)	mg/kg	F963 – 17	N.D.	90	Pass
Mercury, (Hg)	mg/kg	F963 – 17	N.D.	60	Pass
Selenium, (Se)	mg/kg	F963 – 17	N.D.	500	Pass

Nut					
Test Item	Unit	Test Method	Result	Limit	Verdict
Antimony, (Sb)	mg/kg	F963 – 17	N.D.	60	Pass
Arsenic, (As)	mg/kg	F963 – 17	N.D.	25	Pass
Barium, (Ba)	mg/kg	F963 – 17	N.D.	1000	Pass
Cadmium, (Cd)	mg/kg	F963 – 17	N.D.	75	Pass
Chromium, (Cr)	mg/kg	F963 – 17	N.D.	60	Pass
Lead, (Pb)	mg/kg	F963 – 17	N.D.	90	Pass
Mercury, (Hg)	mg/kg	F963 – 17	N.D.	60	Pass
Selenium, (Se)	mg/kg	F963 – 17	N.D.	500	Pass

Photos
Details of: INDOOR01

View:

[ ] general

[ ] front

[ ] rear

[ ] right

[ ] left

[ ] top

[ ] bottom

Details of: General view

View:

[ ] general

[ ] front

[ ] rear

[ ] right

[ ] left

[ ] top

[ ] bottom

Details of: General view

View:

[ ] general

[ ] front

[ ] rear

[ ] right

[ ] left

[ ] top

[ ] bottom

Details of: General view

View:

[ ] general

[ ] front

[ ] rear

[ ] right

[ ] left

[ ] top

[ ] bottom

Details of: General view

View:

[ ] general

[ ] front

[ ] rear

[ ] right

[ ] left

[ ] top

[ ] bottom

Details of: General view

View:

[ ] general

[ ] front

[ ] rear

[ ] right

[ ] left

[ ] top

[ ] bottom

Details of: General view

View:

[ ] general

[ ] front

[ ] rear

[ ] right

[ ] left

[ ] top

[ ] bottom

Details of: General view

View:

[ ] general

[ ] front

[ ] rear

[ ] right

[ ] left

[ ] top

[ ] bottom

Details of: General view

View:

[ ] general

[ ] front

[ ] rear

[ ] right

[ ] left

[ ] top

[ ] bottom

Details of: General view

View:

[ ] general

[ ] front

[ ] rear

[ ] right

[ ] left

[ ] top

[ ] bottom

Details of: General view

View:

[ ] general

[ ] front

[ ] rear

[ ] right

[ ] left

[ ] top

[ ] bottom

Details of: General view

View:

[ ] general

[ ] front

[ ] rear

[ ] right

[ ] left

[ ] top

[ ] bottom

Details of: General view

View:

[ ] general

[ ] front

[ ] rear

[ ] right

[ ] left

[ ] top

[ ] bottom

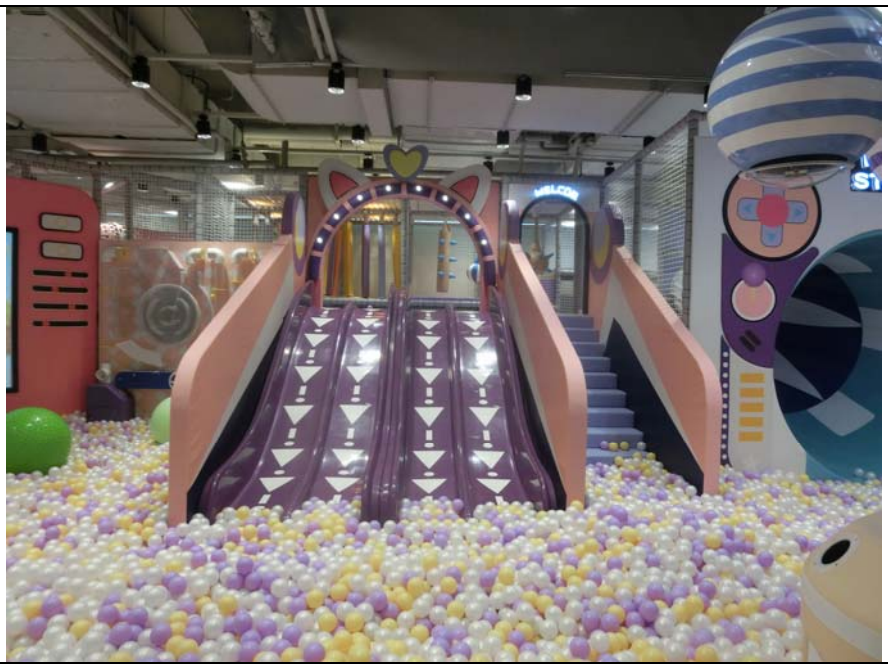

Details of: General view

View:

[ ] general

[ ] front

[ ] rear

[ ] right

[ ] left

[ ] top

[ ] bottom

Details of: General view

View:

[ ] general

[ ] front

[ ] rear

[ ] right

[ ] left

[ ] top

[ ] bottom

Details of: General view

View:

[ ] general

[ ] front

[ ] rear

[ ] right

[ ] left

[ ] top

[ ] bottom

Details of: General view

View:

[ ] general

[ ] front

[ ] rear

[ ] right

[ ] left

[ ] top

[ ] bottom

Details of: General view

View:

[ ] general

[ ] front

[ ] rear

[ ] right

[ ] left

[ ] top

[ ] bottom

Details of: General view

View: [ ] general [ ] front [ ] rear [ ] right [ ] left [ ] top [ ] bottom	

Details of: General view

View: [ ] general [ ] front [ ] rear [ ] right [ ] left [ ] top [ ] bottom	

The end of report